Computervision

CV Digitizer (CVD)—Series 3

Logic Diagrams

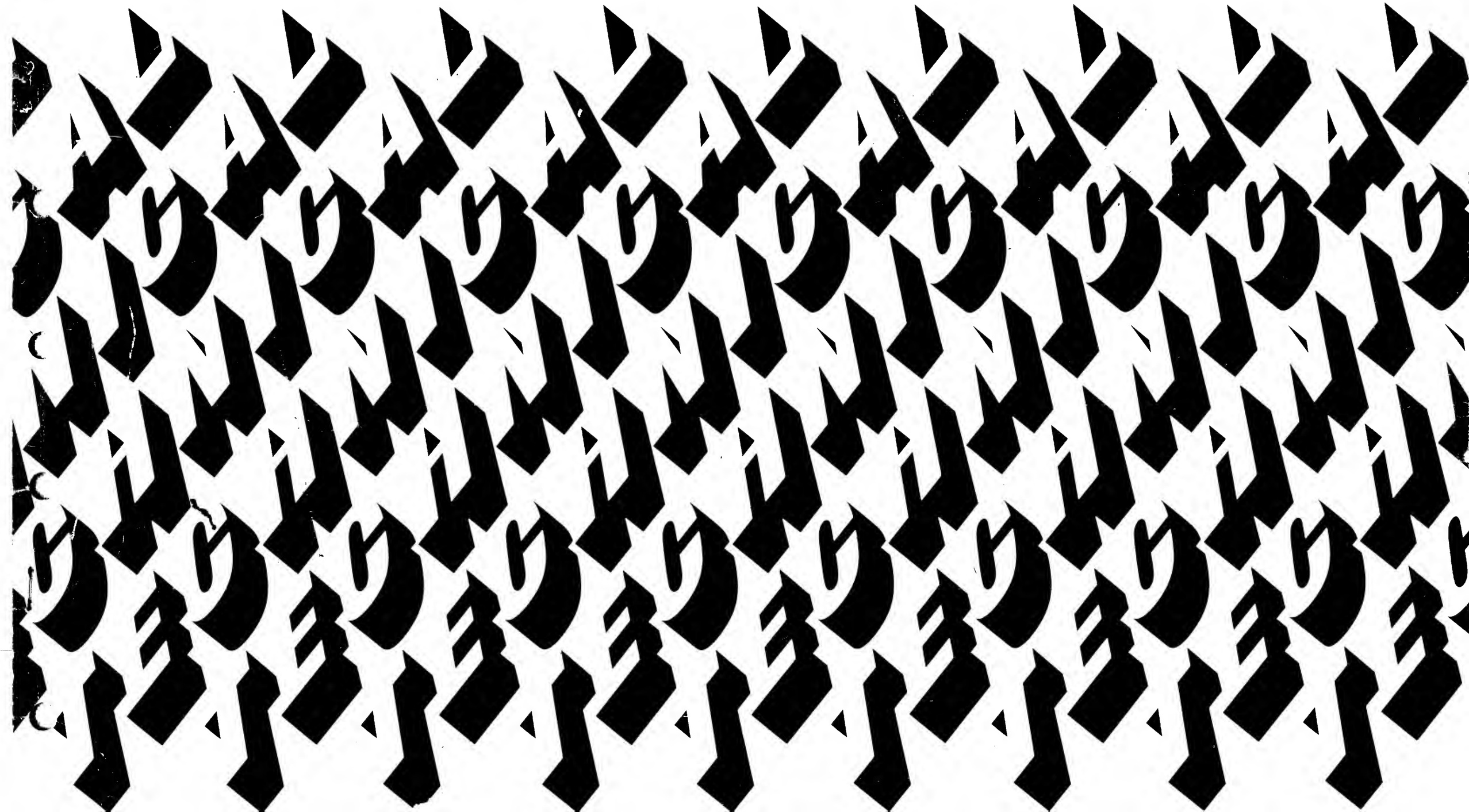

CV Digitizer (CVD)-Series 3

Logic Diagrams

PROPRIETARY NOTICE

The information and drawings contained herein are the sole property of Computervision Corporation. Use of this document is reserved exclusively for Computervision personnel. Reproduction of this matter in whole or in part is forbidden without the express written consent of Computervision.

©Copyright May 1978
Computervision Corporation
All Rights Reserved
Printed in USA

Order No. 001-00510

REVISIONS				COMPUTERVISION CORPORATION		L20X3007	B REV.
SYM	ECO NO.	APPR					
A	REL. 2270	3/77	Rudd			TITLE CVD ELECTRONIC DOCUMENTATION PACKAGE	
B	ECO 2439	8/77	Rudd				
				L20X3003	1	MODULE CVD 3000	
				NEXT ASSY	QTY	DRN Gbmorr	SHT 1 OF 1

ITEM	PART NO.	REV	QTY	DESCRIPTION (REF DES.)	MANUFACTURER
1	L20X3007	A	REF	CVD ELECT. DOCUM. PKG	NO DRAWING
2					
3					
4					
5					
6					
7					
8	DA20E3050	A	1	LOGIC BOARD ASSY	
9	DS20E3054	A	1	LOGIC BOARD SCHEMATIC	
10	DS20E3061	A	1	ANALOG BOARD SCHEMATIC	
11	CS20E2068	D	1	PUCK BOARD SCHEMATIC	
12	CS20E2236	A	1	PEN BOARDS SCHEMATIC	
13	DS20E2046	B	1	MESSAGE UNIT SCHEMATIC	
14	DS20E3002	A	1	SYSTEM INTERCONN. DIAG.	
15					
16	DS20E2196	A	1	BACK LIGHTING SCHEMATIC	
17					
18	BS20E3097	A	1	CVD TIMING BOARD SCHEMATIC	
19					
20					
21					
22					
23					
24					
25					

LOCATION 20C

LOCATION 19E

LOCATION 17E

LOCATION 17M

LOCATION 17N

LOCATION 16N

LOCATION 16E

LOCATION 8C

LOCATION 4B

NOTE 1
NOTE 3

NOTE 1

XD XN XE XP

XA XB XC

XF XG XJ XK

XM XL

	B	C	D	E	F	G	H	J	K	L	M	N	P	R	S
20	7411	BA20E3110	7474	8820									SW. PAK	2002A	2002A
19	7432	74123	7432	BA20E3105	7400								3302P	2002A	2002A
18	7474	8097	7405	8830	74193		BA20E3130					5082-4370 5082-4370	74LS138	3902P	2002A	2002A
17	7474	7404	7404	BA20E3100	7486	7402	7404				BA20E3120	BA20E3115	3302P	2002A	2002A
16	74193	74132	898-1-R 3.3K	BA20E2170	8097	74LS138	74LS138			7410	7400	BA20E2140	898-1-R 6.8K	2719M	2719M
15	74193	74164	CR 79	PACE 4P IPC-16A/500D		74LS138	74LS138	7432		7404	7408	7404	74LS138	2002A	2002A
14	74165	74164				74LS138	74173	7405		7410		PBRG	3302P	2002A	2002A
13	74165	8097	IPC-16A/502D(STE)	DP8300N		74LS138	74173	7474				74173	3302P	2002A	2002A
12	7474	8097				74LS138	74173	7432				74173	898-1-R 6.8K	2002A	2002A
11	7474	7432	DP8300N	DP8300N		7420	74173	8097		UART		74173	3302P	BA20E2125	BA20E2125
10	8097	7408	BA20E3076-B1	BA20E3076-B3		7432	898-1-R 3.3K	7420		BA20E3076-B5	BA20E3076-B7	74154		BA20E2125	BA20E2126
9	7402	7400				8097	8097	8097						2002A	
8	8097	BA20E2130	BA20E3076-B8	BA20E3076-B2		7402	7432	7404		BA20E3076-B4	BA20E3076-B6	3302P	3302P	2002A	
7	8097	74123	2102	2102	2102	2102	7474	8097		BA20E3076-B9	BA20E3076-11	3302P	4116R 001-123	2074A	2074A
6	7408		2102	2102	2102	2102	7408	7400					4116R 001-123	2074A	2074A
5	7404		2102	2102	2102	2102	7432	BA20E3125		BA20E3076-08	BA20E3076-10	8097	898-1-R 3.3K		
4	BA20E2145	8097	2102	2102	2102	2102	8097	9602	74173	74173		8097			
3	74132	8097	8097	8097	8097	74173	74173	74173	74173	74173	7432	74173			
2	7474	898-1-R 3.3K	898-1-R 3.3K	7432	8097	8097	LED	7404	7474	8097	8097	74173			
1	43-053001	SW. PAK	SW. PAK	SW. PAK	SW. PAK	898-1-R 3.3K	SW. PAK								

SEE NOTE 2

LOCATIONS 10R, 10S, 11R & 11S

LOCATION 5J

LOCATION 18H

SECTION A-A
SCALE: 2X
(2 PLACES)

71 SCREW
70 STANDOFF
69 SCREWLOCK

NOTES:

1. REMOVE SOLDER MASK FROM AREAS INDICATED. INSTALL CONNECTORS XD & XE ON FAR SIDE OF BOARD (HAND SOLDER).
2. LOCATE PIN 1 AT THIS CORNER, TYPICAL FOR ALL SOCKETS.
3. REMOVE PIN 4 FROM CONNECTOR XD FOR KEYING BEFORE SOLDER IS IN PLACE.

SWITCH PAK (18 PIN)

LED

SWITCH PAK (6 REQ'D)

14 PIN I.C.

LOCATION 1P

LOCATION 8F

LOCATIONS 4D, 4D, 1E, 1F & 8D

I.C.

8 PIN SOCKET

DA20E3050

THIS DRAWING CONTAINS INFORMATION PROPRIETARY TO COMPUTERVISION CORPORATION AND IS NOT TO BE USED OR REPRODUCED WITHOUT PERMISSION OF COMPUTERVISION CORPORATION

TOLERANCES
DECIMAL
XX ± .0
XXX ± .005
XXXX ± .0010
FRACTIONAL ± 1/64
ANGULAR ± 1°

DRN COPY FROM

MATERIAL: SEE B MODEL

FINISH:

NEXT ASSEMBLY

QTY

REVISIONS

LTR	REVISION DESCRIPTION	APPR.	DATE
	E.C.O. 2270		

DRN
CHK
ENGR
PROJ MGR
MFG
SIGNATURE DATE
REMOVE ALL BURRS AND SHARP EDGES

TITLE
LOGIC BOARD FINAL ASSEMBLY

COMPUTERVISION CORP.
SOUTH AVENUE
BURLINGTON, MASS. 01803

SCALE NONE
SIZE DWG NO. DA20E3050
WT.
SHEET 1 OF 1

REV A REV

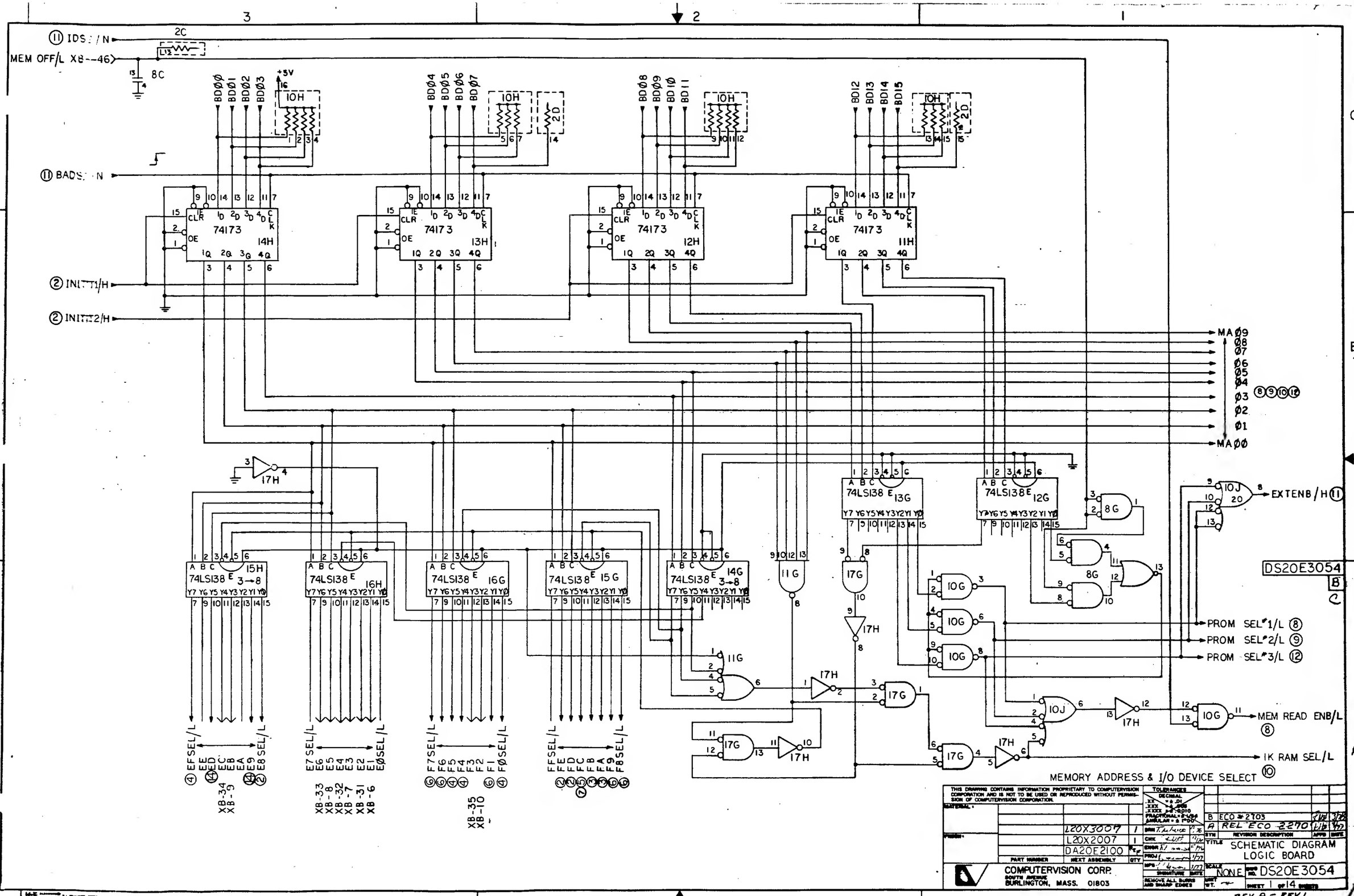

11 IDS/N
MEM OFF/L XB--46
2C
8C
BDØØ BDØ1 BDØ2 BDØ3
+5V
10H
BDØ4 BDØ5 BDØ6 BDØ7
2D
BDØ8 BDØ9 BD1Ø BD11
BD12 BD13 BD14 BD15
11 BADS/N
74173
14H
13H
12H
11H
2 INIT1/H
2 INIT2/H
MAØ9 Ø8 Ø7 Ø6 Ø5 Ø4 Ø3 Ø2 Ø1 MAØØ
8 9 10 12
17H
74LS138
15H
16H
16G
15G
14G
13G
12G
11G
17G
10G
8G
10J
EXTENB/H 11
DS20E3054
PROM SEL#1/L 8
PROM SEL#2/L 9
PROM SEL#3/L 12
MEM READ ENB/L 8
IK RAM SEL/L 10
EF SEL/L
EE ED EC EB EA E9 E8 SEL/L
XB-34 XB-9
E7 SEL/L
E6 E5 E4 E3 E2 E1 EØ SEL/L
XB-33 XB-8 XB-32 XB-7 XB-31 XB-6
F7 SEL/L
F6 F5 F4 F3 F2 F1 FØ SEL/L
XB-35 XB-10
FF SEL/L
FE FD FC FB FA F9 F8 SEL/L
MEMORY ADDRESS & I/O DEVICE SELECT
THIS DRAWING CONTAINS INFORMATION PROPRIETARY TO COMPUTERVISION CORPORATION AND IS NOT TO BE USED OR REPRODUCED WITHOUT PERMISSION OF COMPUTERVISION CORPORATION.
L20X3007 1
L20X2007 1
DA20E2100
PART NUMBER
NEXT ASSEMBLY
QTY
COMPUTERVISION CORP.
SOUTH AVENUE
BURLINGTON, MASS. 01803
TOLERANCES
DECIMAL
.XX = ±.01
.XXX = ±.005
.XXXX = ±.0010
FRACTIONAL = ±1/64
ANGULAR = ±1°00'
B ECO #2703
A REL ECO 2270
REVISION DESCRIPTION
TITLE SCHEMATIC DIAGRAM LOGIC BOARD
SCALE NONE
DWG NO. DS20E3054
SHEET 1 OF 14 SHEETS
REV A = REV 1

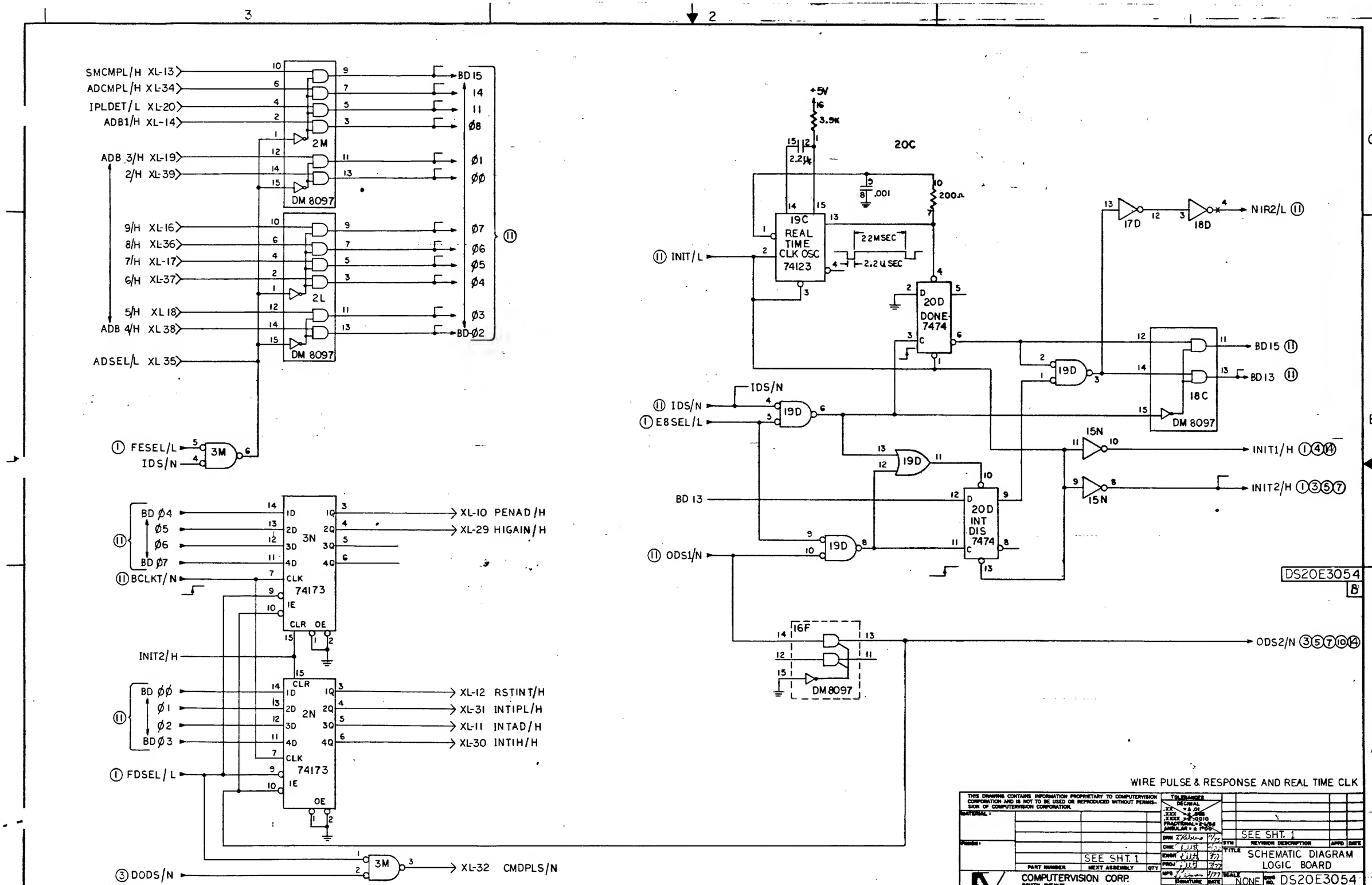

WIRE PULSE & RESPONSE AND REAL TIME CLK

THIS DRAWING CONTAINS INFORMATION PROPRIETARY TO COMPUTERVISION CORPORATION AND IS NOT TO BE USED OR REPRODUCED WITHOUT PERMISSION OF COMPUTERVISION CORPORATION.

MATERIAL:

FINISH:

PART NUMBER	NEXT ASSEMBLY	QTY
	SEE SHT. 1	

COMPUTERVISION CORP.
SOUTH AVENUE
BURLINGTON, MASS. 01803

TOLERANCES
DECIMAL
.XX = ± .01
.XXX = ± .005
.XXXX = ± .0010
FRACTIONAL = ± 1/64
ANGULAR = ± 1°00'

DRN 11/75
CHK
ENGR 3/77
PROJ 3/77
MFG 5/77
SIGNATURE DATE

REMOVE ALL BURRS AND SHARP EDGES

SYM	REVISION DESCRIPTION	APPD	DATE
	SEE SHT. 1		

TITLE SCHEMATIC DIAGRAM LOGIC BOARD

SCALE NONE

DWG NO. DS20E3054

UNIT WT.

SHEET 2 OF 14 SHEETS

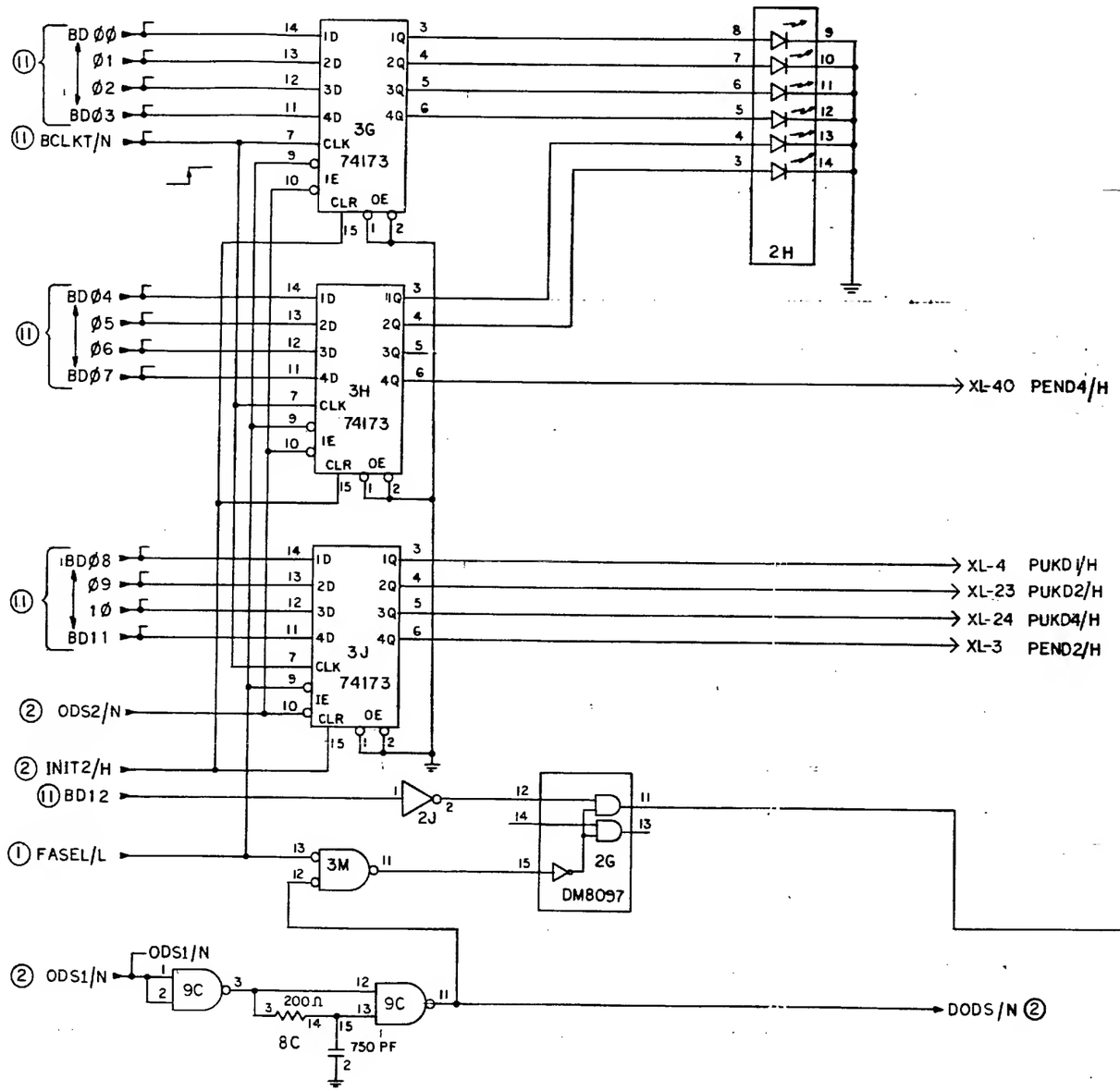

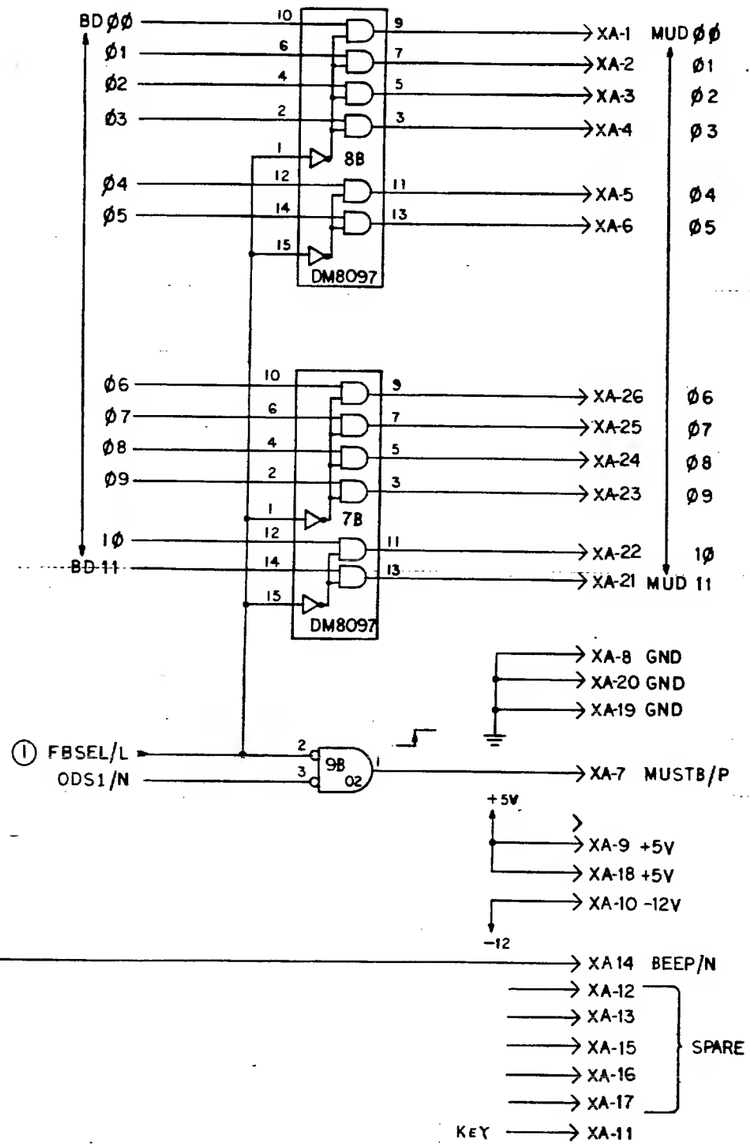

DS20E3054
B

INDICATORS & MESSAGE UNIT INTERFACE

THIS DRAWING CONTAINS INFORMATION PROPRIETARY TO COMPUTERVISION CORPORATION AND IS NOT TO BE USED OR REPRODUCED WITHOUT PERMISSION OF COMPUTERVISION CORPORATION.

MATERIAL	SEE SHT. 1	
FINISH	PART NUMBER	NEXT ASSEMBLY / QTY

COMPUTERVISION CORP.
SOUTH AVENUE
BURLINGTON, MASS. 01803

TOLERANCES DECIMAL .XX ± .01, .XXX ± .005, .XXXX ± .0010, ANGULAR ± 0 30'

	SIGNATURE	DATE
DRN	Tillson	4/1
CHK	RUH	7/1
ENGR	RUH	7/1
PROJ	RUH	7/1
MFG		

REMOVE ALL BURRS AND SHARP EDGES

SEE SHT. 1

SYM	REVISION DESCRIPTION	APPD	DATE

TITLE SCHEMATIC DIAGRAM LOGIC BOARD

SCALE NONE SIZE DWG NO. DS20E3054

UNIT WT. SHEET 3 OF 14

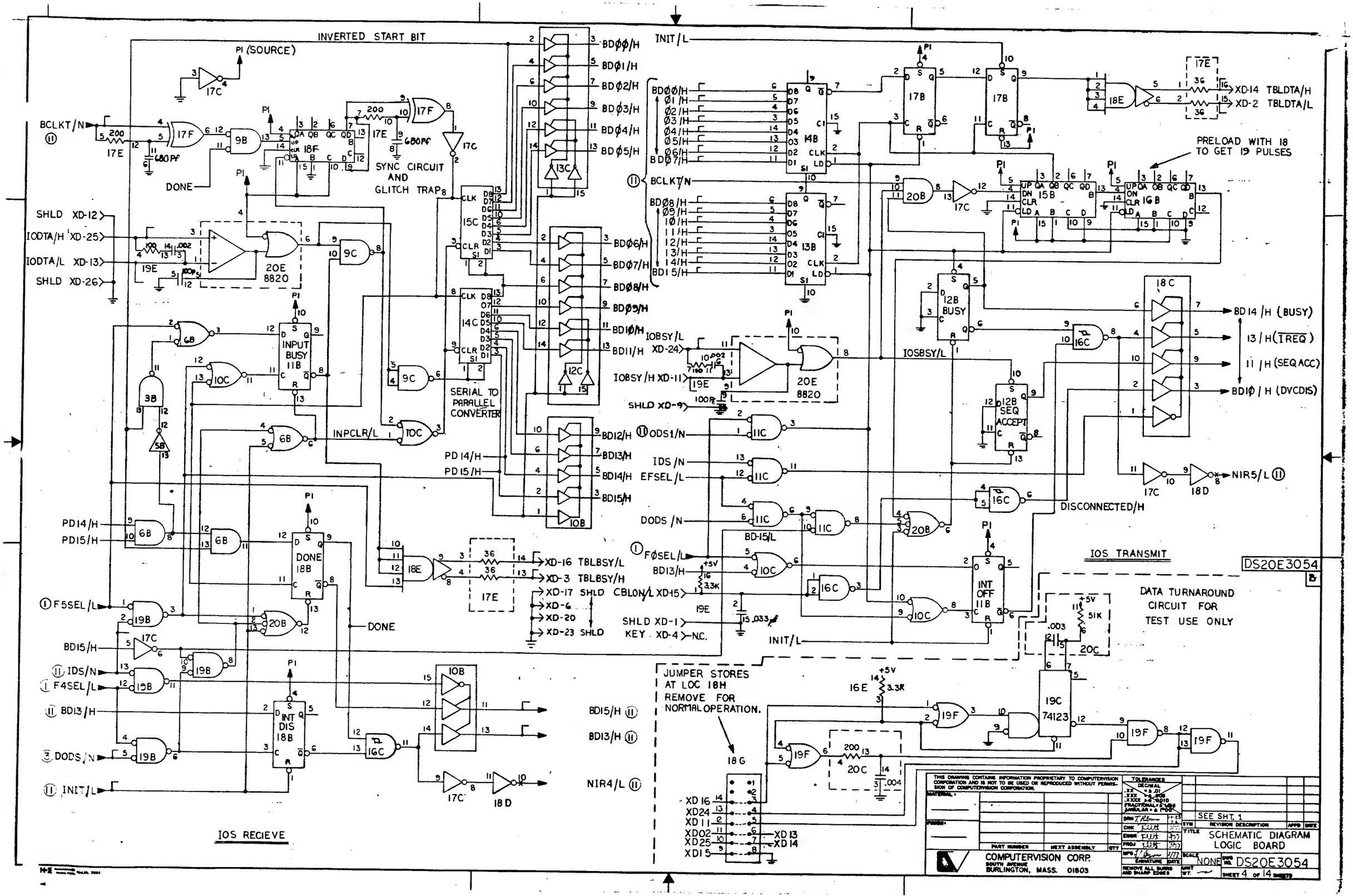
INVERTED START BIT
P1 (SOURCE)
BCLKT/N
DONE
SYNC CIRCUIT AND GLITCH TRAP
SHLD XD-12
IODTA/H XD-25
IODTA/L XD-13
SHLD XD-26
INPUT BUSY 11B
SERIAL TO PARALLEL CONVERTER
INPCLR/L
PD14/H
PD15/H
DONE 18B
INT DIS 18B
F5SEL/L
IDS/N
F4SEL/L
BD13/H
DODS/N
INIT/L
BD15/H
BD13/H
NIR4/L
IOS RECIEVE
BDØØ/H
BDØ1/H
BDØ2/H
BDØ3/H
BDØ4/H
BDØ5/H
BDØ6/H
BDØ7/H
BDØ8/H
BDØ9/H
BD1Ø/H
BD11/H
BD12/H
BD13/H
BD14/H
BD15/H
XD-16 TBLBSY/L
XD-3 TBLBSY/H
XD-17 SHLD
XD-6
XD-20
XD-23 SHLD
INIT/L
BDØØ/H
Ø1/H
Ø2/H
Ø3/H
Ø4/H
Ø5/H
Ø6/H
BDØ7/H
BCLKT/N
BDØ8/H
Ø9/H
1Ø/H
11/H
12/H
13/H
14/H
BD15/H
IOBSY/L XD-24
IOBSY/H XD-11
SHLD XD-9
ODS1/N
IDS/N
EFSEL/L
DODS/N
BD-15/L
FØSEL/L
BD13/H
CBLON/L XD-15
SHLD XD-1
KEY XD-4 N.C.
INIT/L
XD-14 TBLDTA/H
XD-2 TBLDTA/L
PRELOAD WITH 18 TO GET 19 PULSES
IOSBSY/L
BD14/H (BUSY)
13/H (IREQ)
11/H (SEQ ACC)
BD1Ø/H (DVCDIS)
NIR5/L
DISCONNECTED/H
IOS TRANSMIT
DS20E3054
DATA TURNAROUND CIRCUIT FOR TEST USE ONLY
JUMPER STORES AT LOC 18H REMOVE FOR NORMAL OPERATION.
XD16
XD24
XD11
XD02
XD25
XD15
XD13
XD14
THIS DRAWING CONTAINS INFORMATION PROPRIETARY TO COMPUTERVISION CORPORATION AND IS NOT TO BE USED OR REPRODUCED WITHOUT PERMISSION OF COMPUTERVISION CORPORATION.
COMPUTERVISION CORP.
SOUTH AVENUE
BURLINGTON, MASS. 01803
SEE SHT. 1
SCHEMATIC DIAGRAM LOGIC BOARD
SCALE NONE
DWG NO. DS20E3054
SHEET 4 OF 14 SHEETS

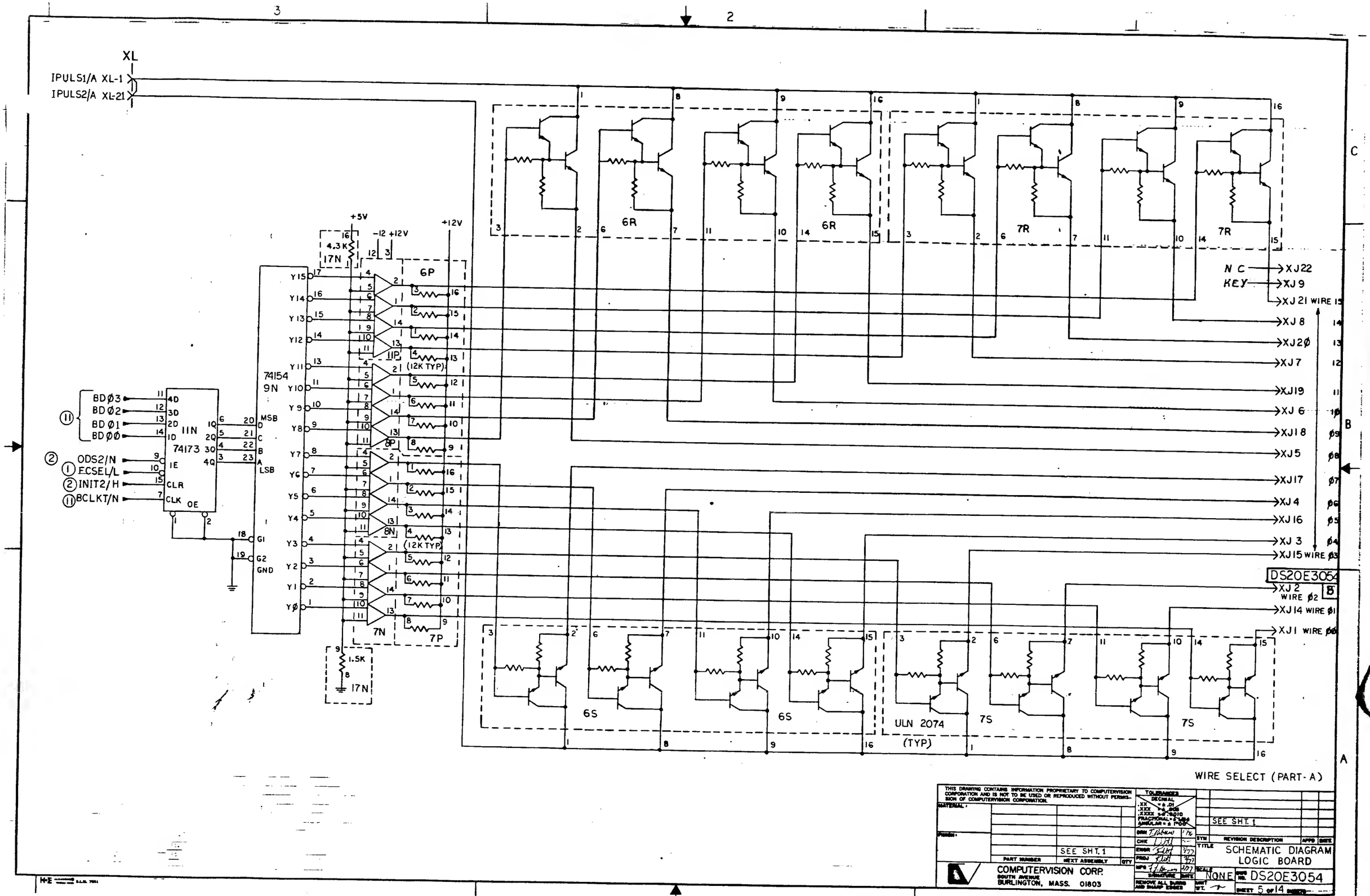
XL
IPULS1/A XL-1
IPULS2/A XL-21
BDØ3
BDØ2
BDØ1
BDØØ
ODS2/N
ECSEL/L
INIT2/H
BCLKT/N
11N
74173
74154
9N
MSB
LSB
GND
+5V
-12 +12V
+12V
4.3K
17N
1.5K
17N
6P
11P
8P
8N
7N
7P
(12K TYP)
6R
7R
6S
7S
ULN 2074
(TYP)
N C
KEY
XJ22
XJ9
XJ21 WIRE 15
XJ8
XJ2Ø
XJ7
XJ19
XJ6
XJ18
XJ5
XJ17
XJ4
XJ16
XJ3
XJ15 WIRE Ø3
DS20E3054
XJ2 WIRE Ø2
XJ14 WIRE Ø1
XJ1 WIRE ØØ
WIRE SELECT (PART-A)
THIS DRAWING CONTAINS INFORMATION PROPRIETARY TO COMPUTERVISION CORPORATION AND IS NOT TO BE USED OR REPRODUCED WITHOUT PERMISSION OF COMPUTERVISION CORPORATION.
SEE SHT. 1
PART NUMBER
NEXT ASSEMBLY
QTY
COMPUTERVISION CORP.
SOUTH AVENUE
BURLINGTON, MASS. 01803
TOLERANCES
DECIMAL
SEE SHT. 1
REVISION DESCRIPTION
TITLE
SCHEMATIC DIAGRAM
LOGIC BOARD
SCALE
NONE
DWG NO. DS20E3054
SHEET 5 OF 14

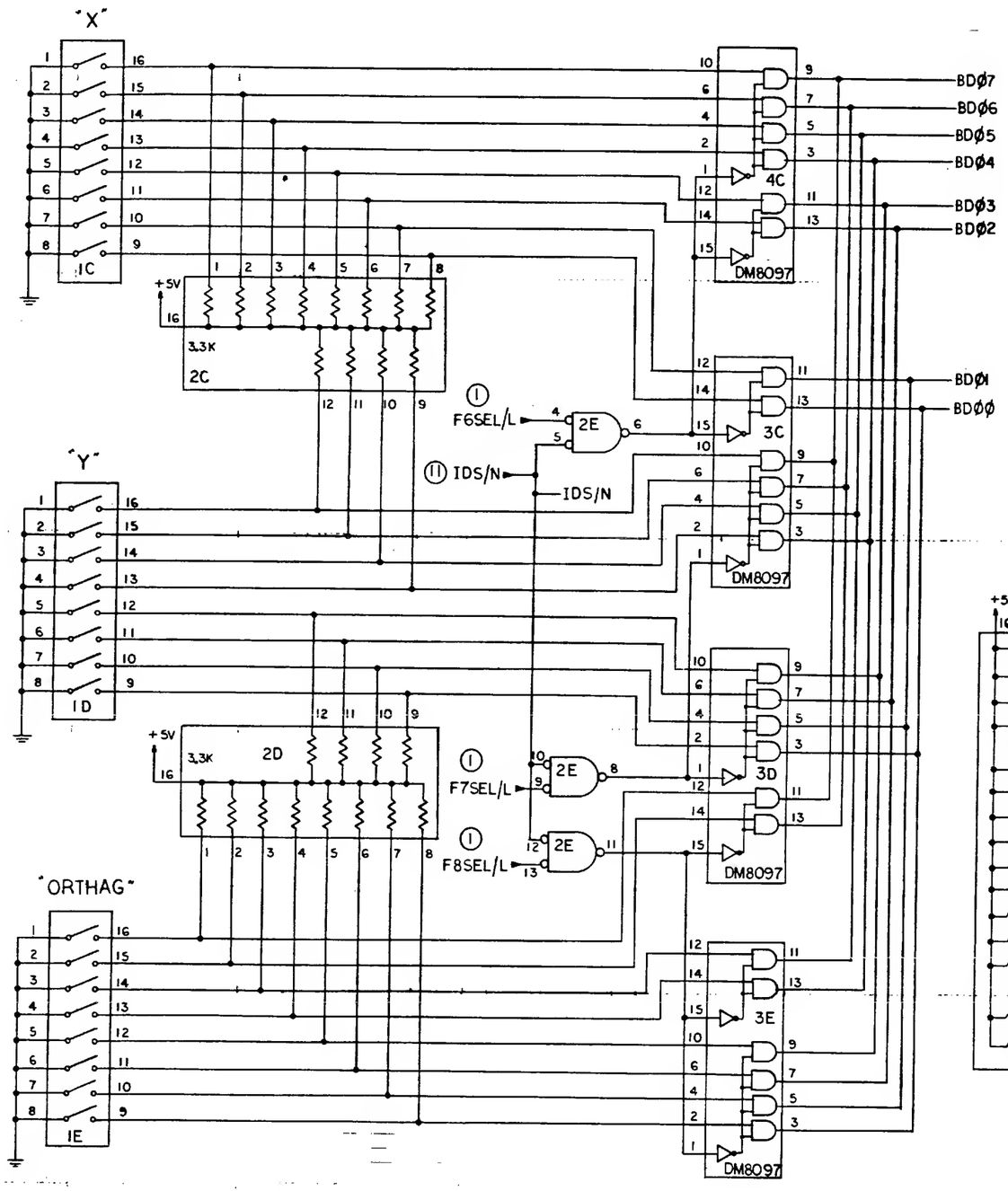

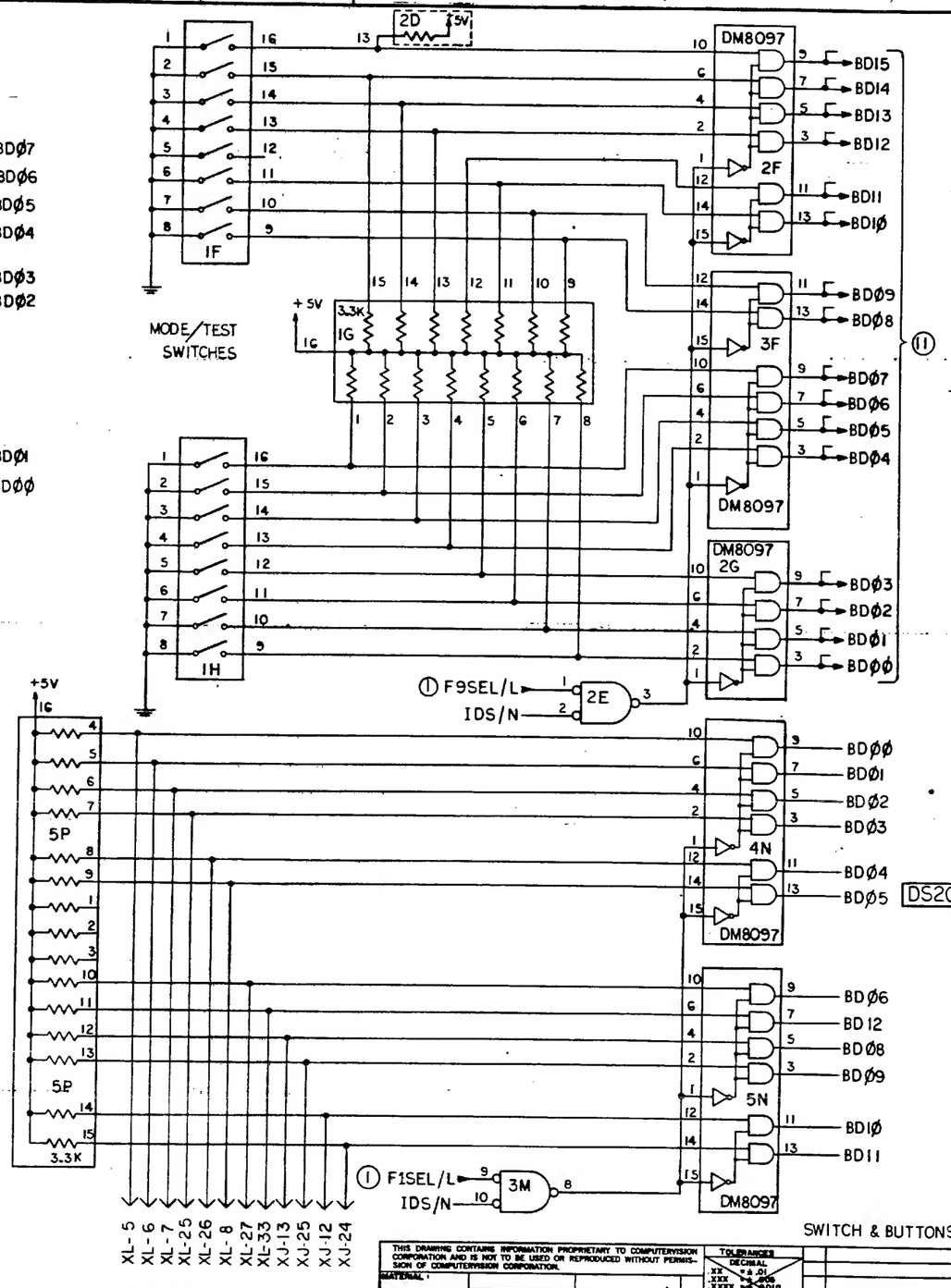

DS20E3054 B

SWITCH & BUTTONS INPUTS

THIS DRAWING CONTAINS INFORMATION PROPRIETARY TO COMPUTERVISION CORPORATION AND IS NOT TO BE USED OR REPRODUCED WITHOUT PERMISSION OF COMPUTERVISION CORPORATION.

MATERIAL: SEE SHT. 1

PART NUMBER | NEXT ASSEMBLY | QTY

TOLERANCES DECIMAL .XX ± .01 .XXX ± .005 .XXXX ± .0010 FRACTIONAL ± 1/64 ANGULAR ± 1°00'

DRN T.Tabeus 8/..

CHK 9/..

ENGR 9/..

PROJ 9/..

MFG 9/..

SIGNATURE DATE

REMOVE ALL BURRS AND SHARP EDGES

SEE SHT. 1

SYM	REVISION DESCRIPTION	APPD	DATE

TITLE: SCHEMATIC DIAGRAM LOGIC BOARD

COMPUTERVISION CORP. SOUTH AVENUE BURLINGTON, MASS. 01803

SCALE: NONE

DWG NO. DS20E3054

UNIT WT. ~

SHEET 6 OF 14 SHEETS

A

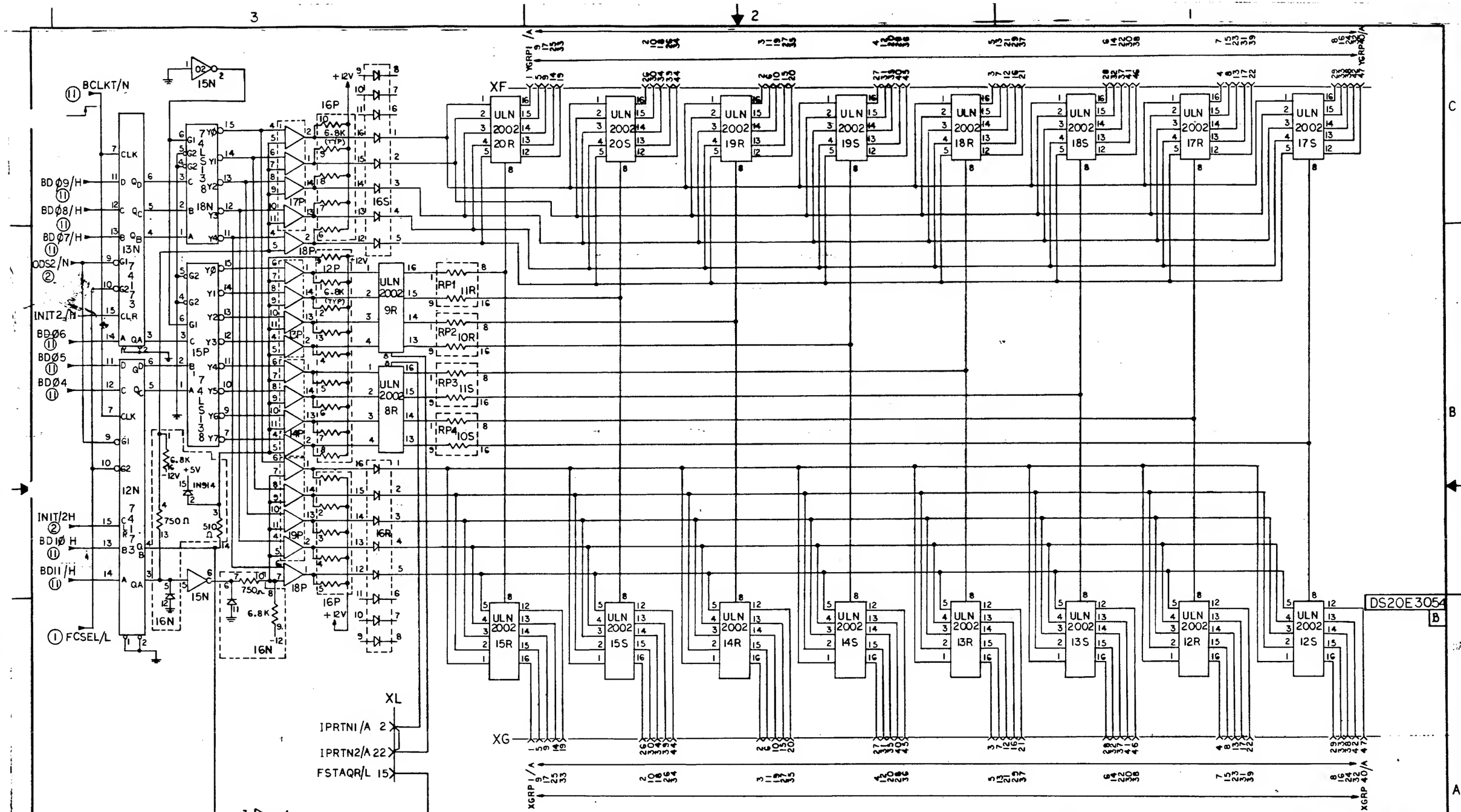

THIS DRAWING CONTAINS INFORMATION PROPRIETARY TO COMPUTERVISION CORPORATION AND IS NOT TO BE USED OR REPRODUCED WITHOUT PERMISSION OF COMPUTERVISION CORPORATION.

SEE SHT. 1		
PART NUMBER	NEXT ASSEMBLY	QTY

COMPUTERVISION CORP.
SOUTH AVENUE
BURLINGTON, MASS. 01803

TOLERANCES
DECIMAL
.XX = ± .01
.XXX = ± .005
.XXXX = ± .0010
FRACTIONAL = ± 1/64
ANGULAR = ± 1°00'

DRN		11/75
CHK		3/77
ENGR		3/77
PROJ		3/77
MFG		3/77
SIGNATURE		DATE

REMOVE ALL BURRS AND SHARP EDGES

SYM	REVISION DESCRIPTION	APPD	DATE
	SEE SHT. 1		

TITLE: SCHEMATIC DIAGRAM LOGIC BOARD

SCALE: NONE
DWG NO. DS20E3054
SHEET 7 OF 14 SHEETS

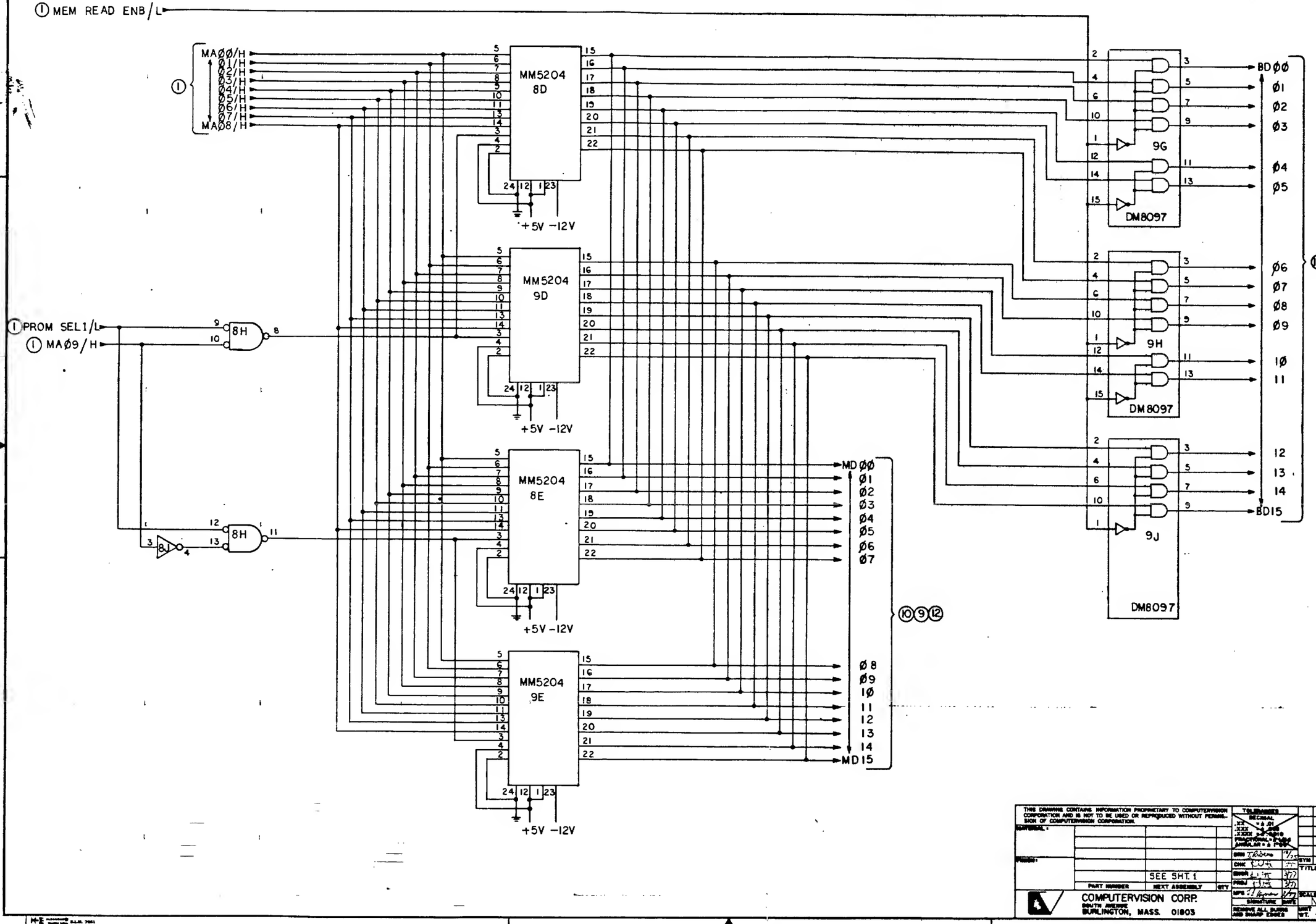
3
2
1
C
B
A
① MEM READ ENB/L
① MAØØ/H
MAØ1/H
MAØ2/H
MAØ3/H
MAØ4/H
MAØ5/H
MAØ6/H
MAØ7/H
MAØ8/H
MM5204 8D
MM5204 9D
MM5204 8E
MM5204 9E
+5V -12V
① PROM SEL1/L
① MAØ9/H
8H
8J
9G
9H
9J
DM8097
BD ØØ
Ø1
Ø2
Ø3
Ø4
Ø5
Ø6
Ø7
Ø8
Ø9
1Ø
11
12
13
14
BD15
MD ØØ
MD 15
⑪
⑩⑨⑫
DS20E3054
B
1K X 16 PROM
THIS DRAWING CONTAINS INFORMATION PROPRIETARY TO COMPUTERVISION CORPORATION AND IS NOT TO BE USED OR REPRODUCED WITHOUT PERMISSION OF COMPUTERVISION CORPORATION.
SEE SHT. 1
PART NUMBER
NEXT ASSEMBLY
QTY
COMPUTERVISION CORP.
BURLINGTON, MASS. 01803
SEE SHT. 1
SYM
REVISION DESCRIPTION
APPD
DATE
TITLE
SCHEMATIC DIAGRAM
LOGIC BOARD
SCALE
NONE
DWG NO.
DS20E3054
SHEET 8 OF 14

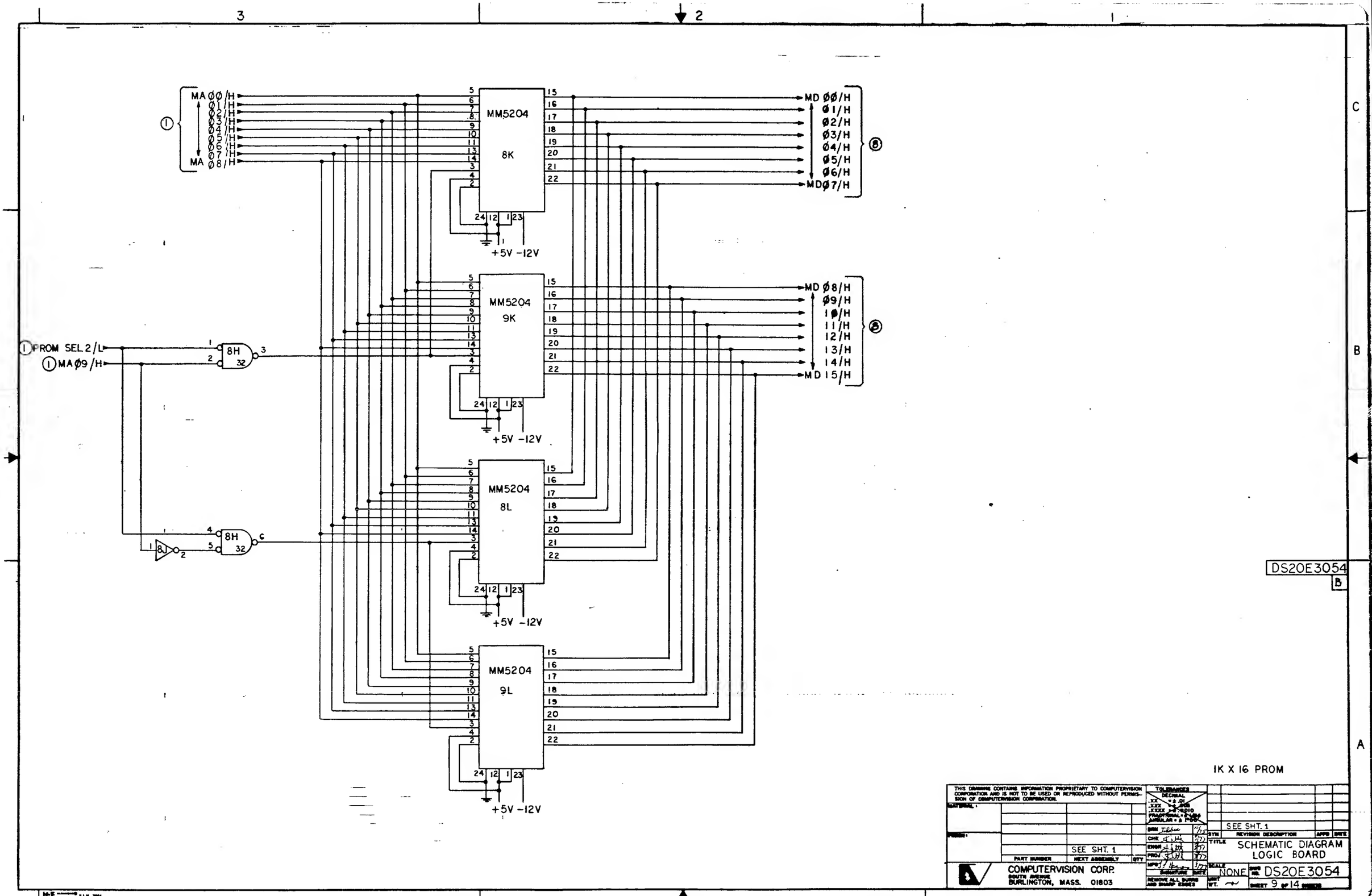

MA ØØ/H
Ø1/H
Ø2/H
Ø3/H
Ø4/H
Ø5/H
Ø6/H
Ø7/H
MA Ø8/H
MM5204
8K
MD ØØ/H
Ø1/H
Ø2/H
Ø3/H
Ø4/H
Ø5/H
Ø6/H
MD Ø7/H
+5V -12V
MM5204
9K
MD Ø8/H
Ø9/H
10/H
11/H
12/H
13/H
14/H
MD 15/H
PROM SEL 2/L
MA Ø9/H
8H
32
MM5204
8L
8J
MM5204
9L
DS20E3054
B
1K X 16 PROM
THIS DRAWING CONTAINS INFORMATION PROPRIETARY TO COMPUTERVISION CORPORATION AND IS NOT TO BE USED OR REPRODUCED WITHOUT PERMISSION OF COMPUTERVISION CORPORATION.
SEE SHT. 1
PART NUMBER
NEXT ASSEMBLY
QTY
COMPUTERVISION CORP.
SOUTH AVENUE
BURLINGTON, MASS. 01803
SEE SHT. 1
REVISION DESCRIPTION
TITLE
SCHEMATIC DIAGRAM
LOGIC BOARD
SCALE
NONE
DWG NO. DS20E3054
SHEET 9 OF 14

3 2 1

C B A

(11) BDØØ BDØ1 BDØ2 BDØ3

MAØØ ↕ MAØ9

(11) BDØ4 BDØ5 BDØ6 BDØ7

(1) 1K RAM SEL/L

(11) BDØ8 BDØ9 BD1Ø BD11

(11) BD12 BD13 BD14 BD15

(2) ODS2 /N

7D 7E 7F 7G — MM 2102 — A0 A1 A2 A3 A4 A5 A6 A7 A8 A9 DIN CE OUT R/W

6D 6E 6F 6G — A0 A1 A2 A3 A4 A5 A6 A7 A8 A9 DIN CE OUT R/W

5D 5E 5F 5G — A0 A1 A2 A3 A4 A5 A6 A7 A8 A9 DIN CE OUT R/W

4D 4E 4F 4G — A0 A1 A2 A3 A4 A5 A6 A7 A8 A9 DIN CE OUT R/W

MDØØ MDØ1 MD Ø2 MD Ø3

MDØ4 MDØ5 MDØ6 MDØ7

MDØ8 MDØ9 MD 1Ø MD 11

MD 12 MD 13 MD 14 MD 15

(8)

DS20E3054 B

1K X 16 MEMORY (RAM)

THIS DRAWING CONTAINS INFORMATION PROPRIETARY TO COMPUTERVISION CORPORATION AND IS NOT TO BE USED OR REPRODUCED WITHOUT PERMISSION OF COMPUTERVISION CORPORATION.

TOLERANCES UNLESS OTHERWISE SPECIFIED: DECIMAL .XX ± .01, .XXX ± .005, .XXXX ± .0010; FRACTIONAL ± 1/64; ANGULAR .30' ± 2 PLACE

MATERIAL: SEE SHT. 1

FINISH: PART NUMBER SEE SHT. 1 — NEXT ASSEMBLY — QTY

BRN T.Adams 4/11/77; CHK ; ENGR J.M. 4/11/77; PROJ J.M. 4/11/77; MFG ; QA ; SIGNATURE DATE

REMOVE ALL BURRS AND SHARP EDGES

SYM	REVISION DESCRIPTION	APPD	DATE
	SEE SHT. 1		

TITLE: SCHEMATIC DIAGRAM LOGIC BOARD

COMPUTERVISION CORP. 9 SOUTH AVENUE BURLINGTON, MASS. 01803

SCALE: NONE SIZE: B DWG NO. DS20E3054 REV

SHEET 10 OF 14 SHEETS

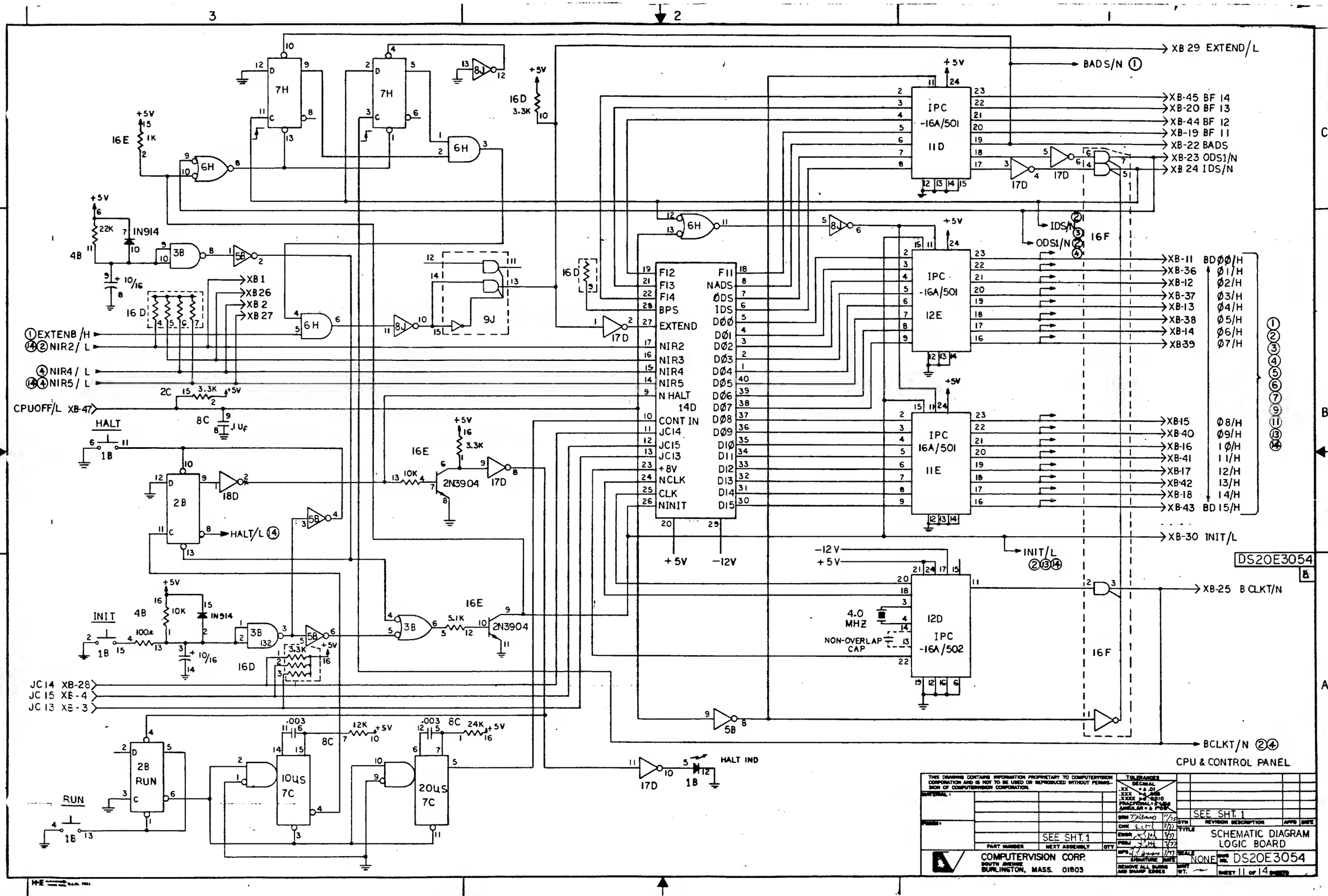

THIS DRAWING CONTAINS INFORMATION PROPRIETARY TO COMPUTERVISION CORPORATION AND IS NOT TO BE USED OR REPRODUCED WITHOUT PERMISSION OF COMPUTERVISION CORPORATION.

TOLERANCES
DECIMAL
.XX = ± .01
.XXX = ± .005
.XXXX = ± .0010
FRACTIONAL = ± 1/64
ANGULAR = ± 1°00'

DRN	T. Tribuno	11/75
CHK	[illegible]	3/77
ENGR	[illegible]	3/77
PROJ	[illegible]	3/77
MFG	[illegible]	3/77
SIGNATURE		DATE

REMOVE ALL BURRS AND SHARP EDGES

PART NUMBER	NEXT ASSEMBLY	QTY
	SEE SHT. 1	

COMPUTERVISION CORP.
SOUTH AVENUE
BURLINGTON, MASS. 01803

SYM	REVISION DESCRIPTION	APPD	DATE
	SEE SHT. 1		

TITLE: SCHEMATIC DIAGRAM LOGIC BOARD

SCALE: NONE
DWG NO. DS20E3054
SHEET 11 OF 14 SHEETS

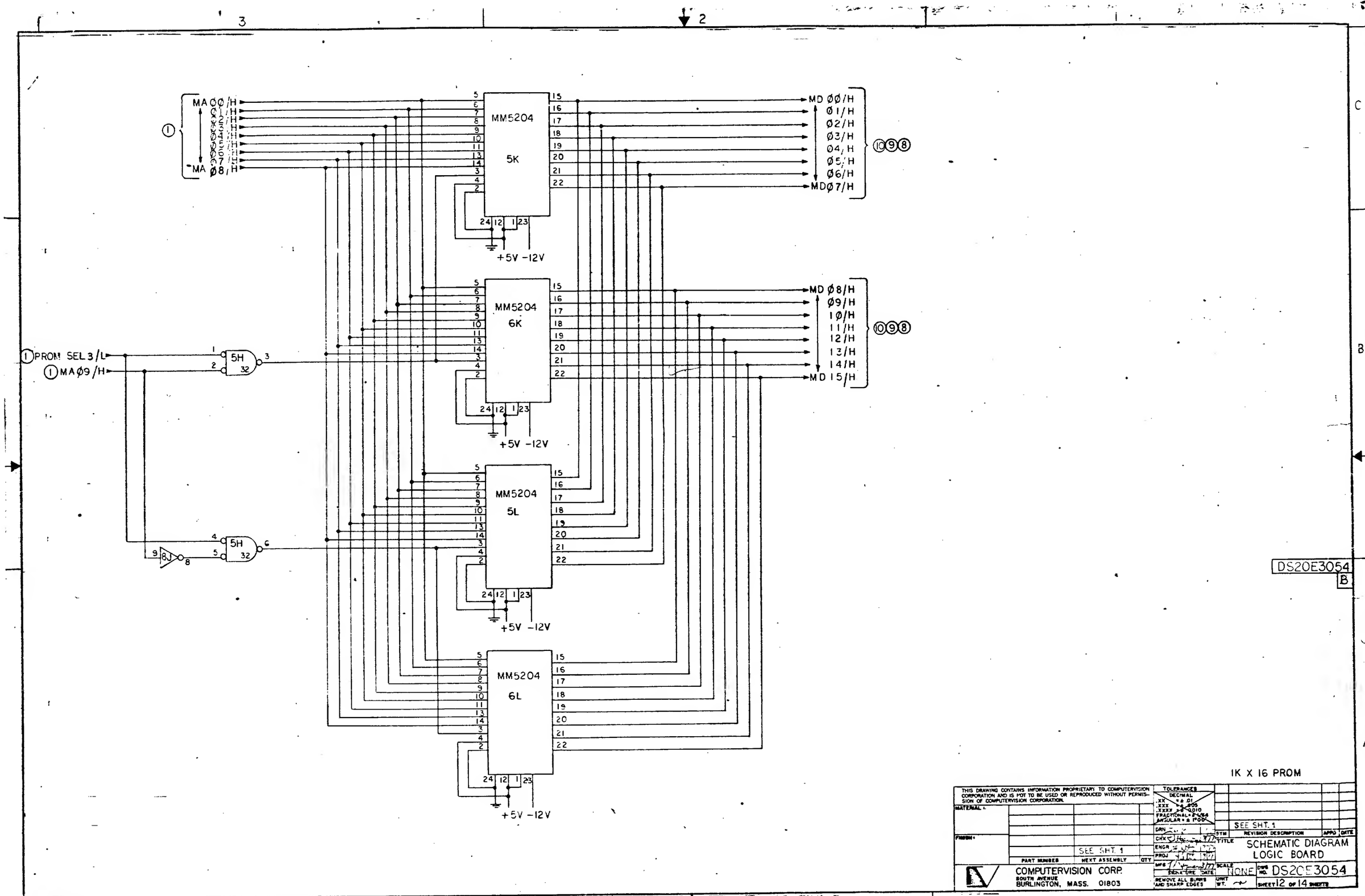

MA ØØ/H
Ø1/H
Ø2/H
Ø3/H
Ø4/H
Ø5/H
Ø6/H
Ø7/H
MA Ø8/H
MM5204
5K
MM5204
6K
MM5204
5L
MM5204
6L
+5V -12V
MD ØØ/H
Ø1/H
Ø2/H
Ø3/H
Ø4/H
Ø5/H
Ø6/H
MD Ø7/H
MD Ø8/H
Ø9/H
1Ø/H
11/H
12/H
13/H
14/H
MD 15/H
PROM SEL 3/L
MA Ø9/H
5H
32
8J
DS20E3054
B
1K X 16 PROM
THIS DRAWING CONTAINS INFORMATION PROPRIETARY TO COMPUTERVISION CORPORATION AND IS NOT TO BE USED OR REPRODUCED WITHOUT PERMISSION OF COMPUTERVISION CORPORATION.
MATERIAL:
FINISH:
PART NUMBER
NEXT ASSEMBLY
QTY
SEE SHT. 1
TOLERANCES
DECIMAL
.XX = ± .01
.XXX = ± .005
.XXXX = ± .0010
FRACTIONAL = ± 1/64
ANGULAR = ± 1°00'
DRN
CHK
ENGR
PROJ
MFG
SIGNATURE
DATE
REMOVE ALL BURRS AND SHARP EDGES
SYM
REVISION DESCRIPTION
APPD
DATE
TITLE
SCHEMATIC DIAGRAM
LOGIC BOARD
SCALE
NONE
DWG NO.
DS20E3054
UNIT WT.
SHEET 12 OF 14 SHEETS
COMPUTERVISION CORP.
SOUTH AVENUE
BURLINGTON, MASS. 01803

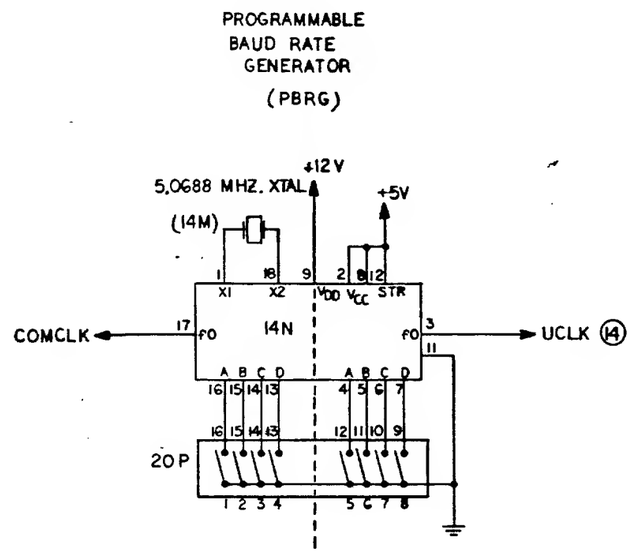

• = SW "ON"

A	B	C	D	BAUD RATE	16 X CLOCK FREQ. KHZ
•	•	•	•	50	0.8
	•	•	•	75	1.2
•		•	•	110	1.76
		•	•	134.5	2.1523
•	•		•	150	2.4
	•		•	300	4.8
•			•	600	9.6
			•	1200	19.2
•	•	•		1800	28.8
	•	•		2000	32.081
•		•		2400	38.4
		•		3600	57.6
•	•			4800	76.8
	•			7200	115.2
•				9600	153.6
				19,200	316.8

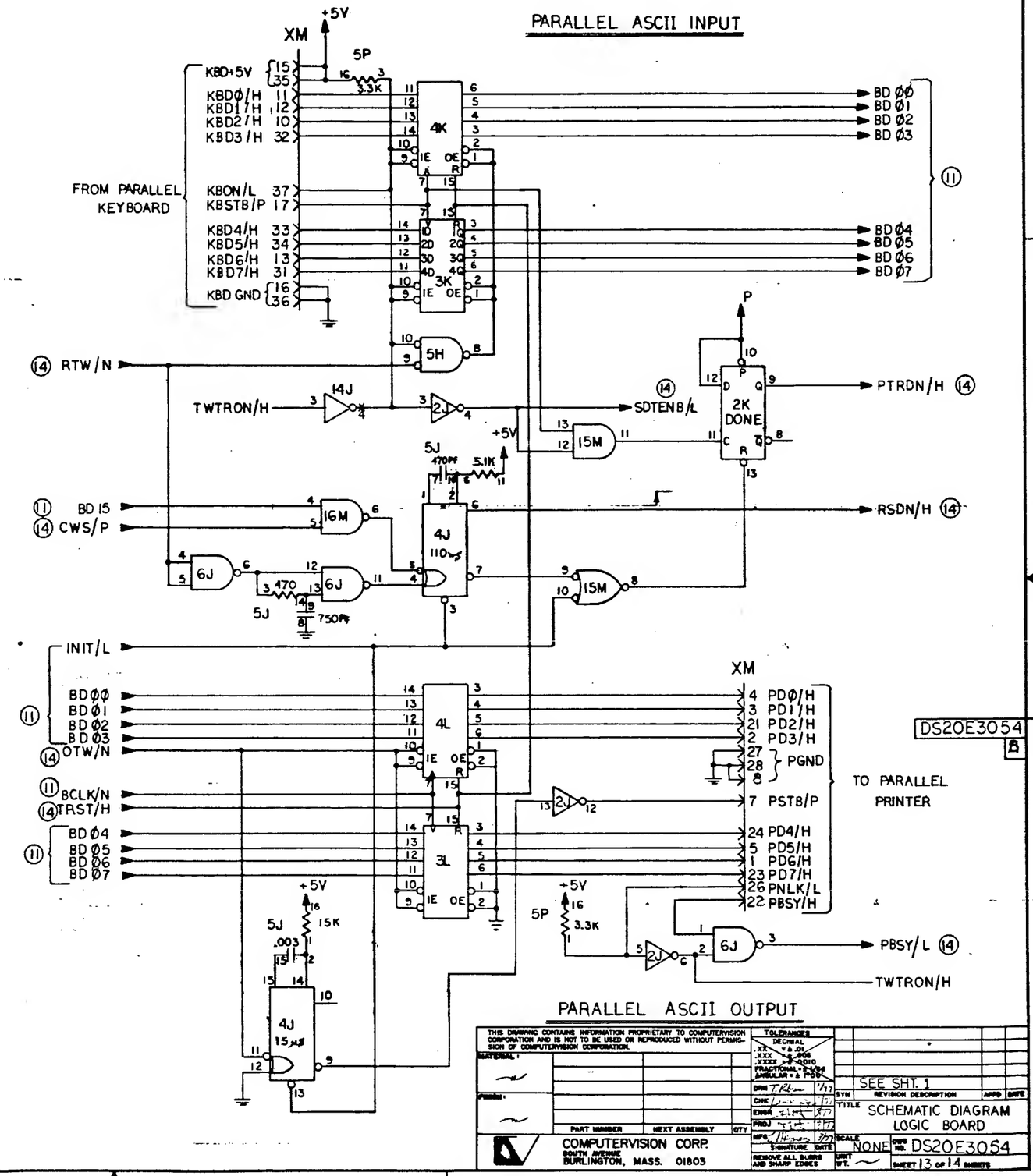

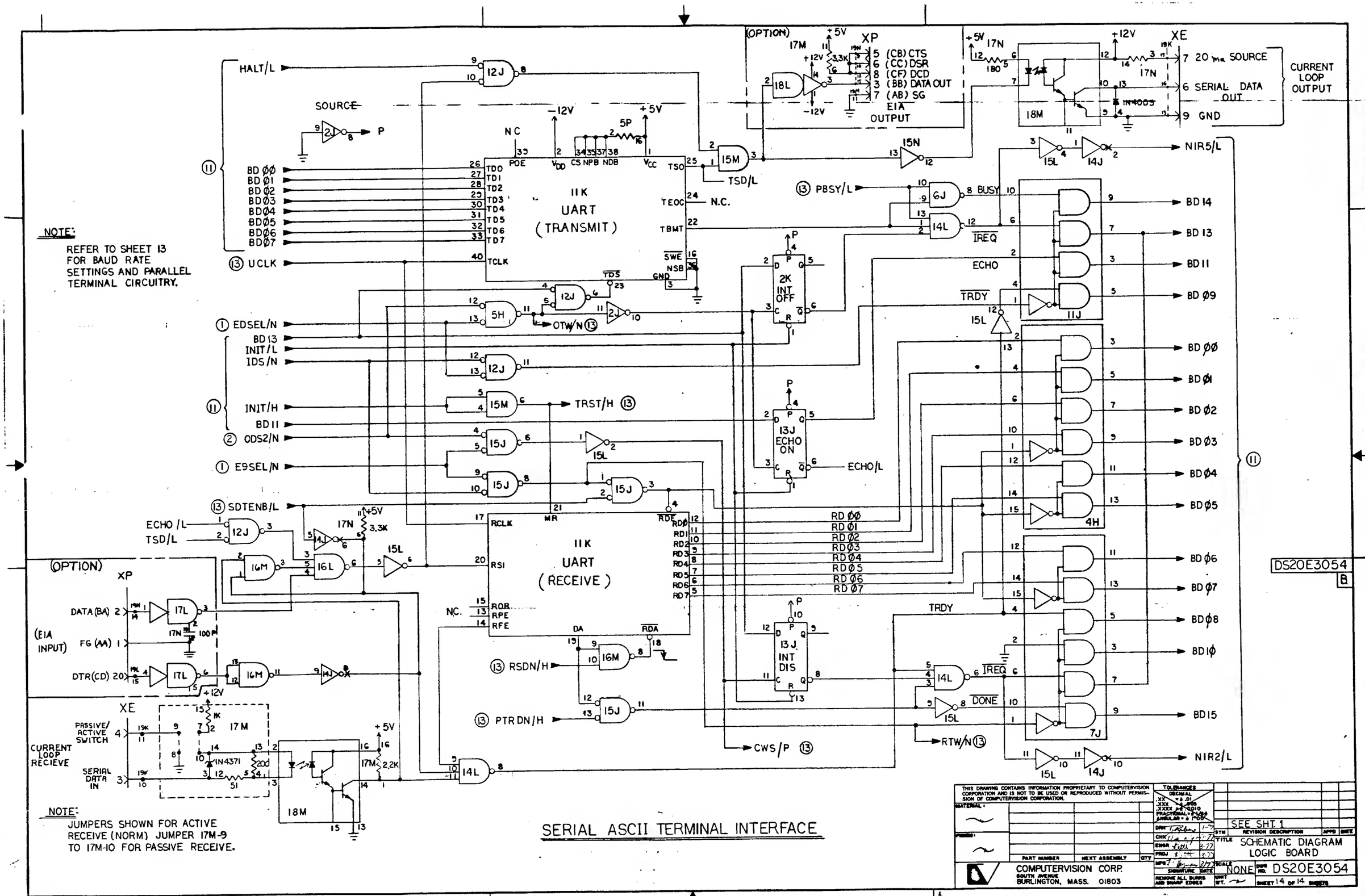

NOTE:
REFER TO SHEET 13 FOR BAUD RATE SETTINGS AND PARALLEL TERMINAL CIRCUITRY.
NOTE:
JUMPERS SHOWN FOR ACTIVE RECEIVE (NORM) JUMPER 17M-9 TO 17M-10 FOR PASSIVE RECEIVE.
11K UART (TRANSMIT)
11K UART (RECEIVE)
2K INT OFF
13J ECHO ON
13J INT DIS
(OPTION)
XP
XE
5 (CB) CTS
6 (CC) DSR
8 (CF) DCD
3 (BB) DATA OUT
7 (AB) SG
EIA OUTPUT
7 20 ma SOURCE
6 SERIAL DATA OUT
9 GND
CURRENT LOOP OUTPUT
(EIA INPUT)
DATA (BA)
FG (AA)
DTR (CD)
CURRENT LOOP RECIEVE
PASSIVE/ ACTIVE SWITCH
SERIAL DATA IN
HALT/L
SOURCE
BD ØØ
BD Ø1
BD Ø2
BD Ø3
BD Ø4
BD Ø5
BD Ø6
BD Ø7
UCLK
EDSEL/N
BD 13
INIT/L
IDS/N
INIT/H
BD 11
ODS2/N
E9SEL/N
SDTENB/L
ECHO/L
TSD/L
TSD/L
PBSY/L
BUSY
IREQ
ECHO
TRDY
DONE
RTW/N
CWS/P
RSDN/H
PTRDN/H
OTW/N
TRST/H
NIR5/L
NIR2/L
BD 14
BD 13
BD 11
BD Ø9
BD Ø8
BD 1Ø
BD 15
DS20E3054
B
SERIAL ASCII TERMINAL INTERFACE
THIS DRAWING CONTAINS INFORMATION PROPRIETARY TO COMPUTERVISION CORPORATION AND IS NOT TO BE USED OR REPRODUCED WITHOUT PERMISSION OF COMPUTERVISION CORPORATION.
COMPUTERVISION CORP.
SOUTH AVENUE
BURLINGTON, MASS. 01803
SEE SHT. 1
SCHEMATIC DIAGRAM LOGIC BOARD
NONE
DS20E3054
SHEET 14 OF 14 SHEETS

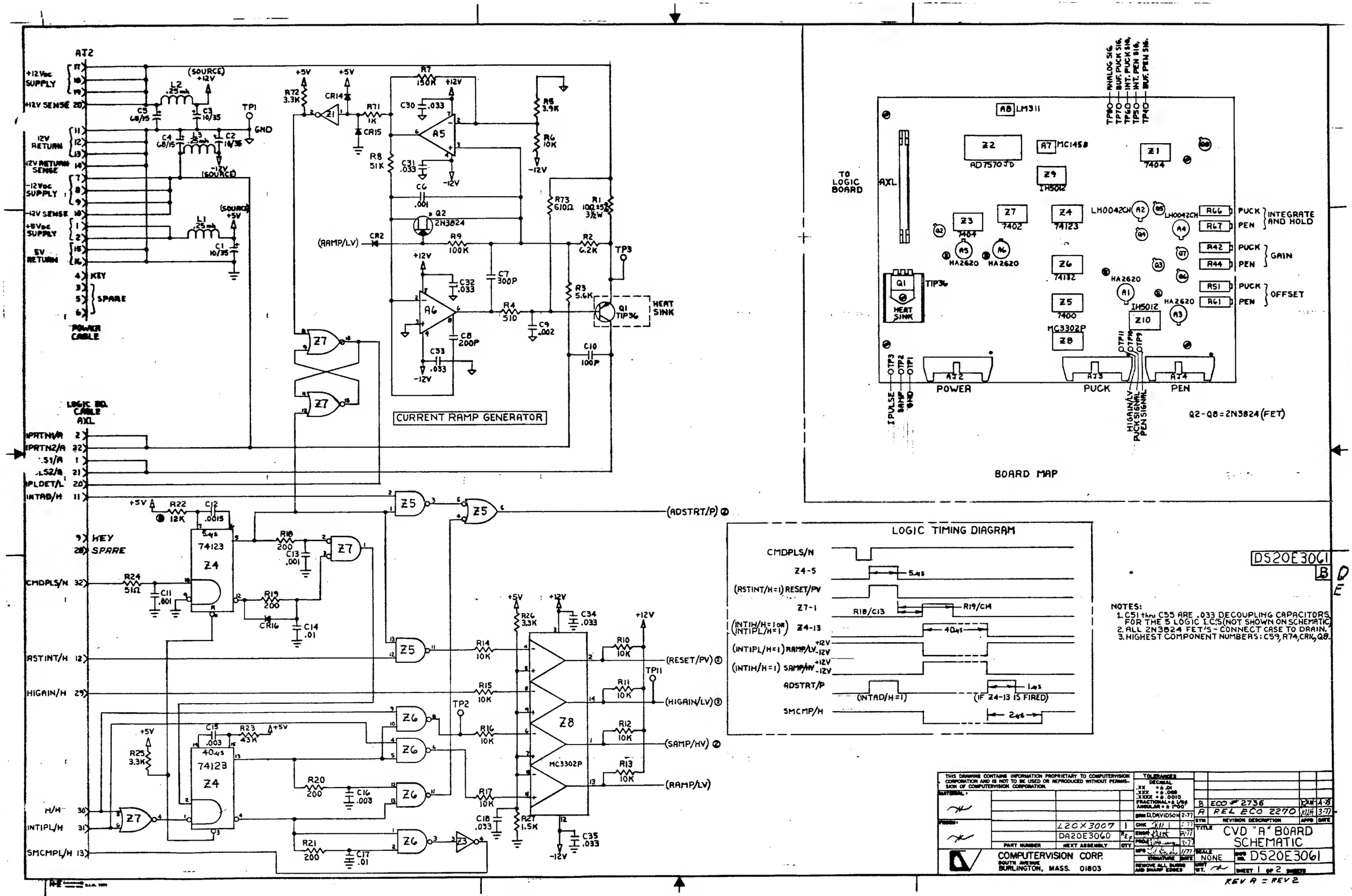

NOTES:
1. C51 thru C55 ARE .033 DECOUPLING CAPACITORS FOR THE 5 LOGIC I.C.'S (NOT SHOWN ON SCHEMATIC)
2. ALL 2N3824 FET'S - CONNECT CASE TO DRAIN.
3. HIGHEST COMPONENT NUMBERS: C59, R74, CR16, Q8.

THIS DRAWING CONTAINS INFORMATION PROPRIETARY TO COMPUTERVISION CORPORATION AND IS NOT TO BE USED OR REPRODUCED WITHOUT PERMISSION OF COMPUTERVISION CORPORATION.

SYM	REVISION DESCRIPTION	APPD	DATE
B	ECO # 2736		4-78
A	REL ECO 2270		3-77

PART NUMBER	NEXT ASSEMBLY	QTY
	L20X3007	1
	DA20E3060	REF

COMPUTERVISION CORP.
SOUTH AVENUE
BURLINGTON, MASS. 01803

TOLERANCES
DECIMAL
.XX = ± .01
.XXX = ± .005
.XXXX = ± .0010
FRACTIONAL = ± 1/64
ANGULAR = ± 1°00'

DRN D. DAVIDSON 2-77
CHK 2-77
ENGR 2-77
PROJ 3-77
MFG 3/77
SIGNATURE DATE
REMOVE ALL BURRS AND SHARP EDGES

TITLE CVD "A" BOARD SCHEMATIC

SCALE NONE
DWG NO. DS20E3061
UNIT WT.
SHEET 1 OF 2 SHEETS

REV A = REV 2

AXL
4 PUKD1/H
23 PUKD2/H
24 PUKD4/H
5 PUKS1/L
6 PUKS2/L
7 PUKS3/L
25 PUKS4/L
26 PUKS5/L

TO LOGIC BOARD

DS20E3061 B

① (HIGAIN/LV)
① (SAMP/HV)
① (RESET/PV)
① (ADSTRT/P)

BUFFER
GAIN
INTEGRATE AND HOLD

16 ADB9/H
36 ADB8/H
17 ADB7/H
37 ADB6/H
18 ADB5/H
38 ADB4/H
19 ADB3/H
39 ADB2/H
14 ADB1/H
34 ADCMPL/H
35 ADSEL/L
10 PENAD/H
15 FSTAQR/L
8 PENS1/L
27 PENS2/L
33 PENS3/L
3 PEND2/H
40 PEND4/H

AD7570 8BIT A/D CONV

THIS DRAWING CONTAINS INFORMATION PROPRIETARY TO COMPUTERVISION CORPORATION AND IS NOT TO BE USED OR REPRODUCED WITHOUT PERMISSION OF COMPUTERVISION CORPORATION.

TOLERANCES DECIMAL .XX ± .01 .XXX ± .005 .XXXX ± .0010 FRACTIONAL ± 1/64 ANGULAR ± 1°00'

SEE SHT 1

COMPUTERVISION CORP. SOUTH AVENUE BURLINGTON, MASS. 01803

TITLE CVD "A" BOARD SCHEMATIC

DWG NO. DS20E3061

SHEET 2 OF 2 SHEETS

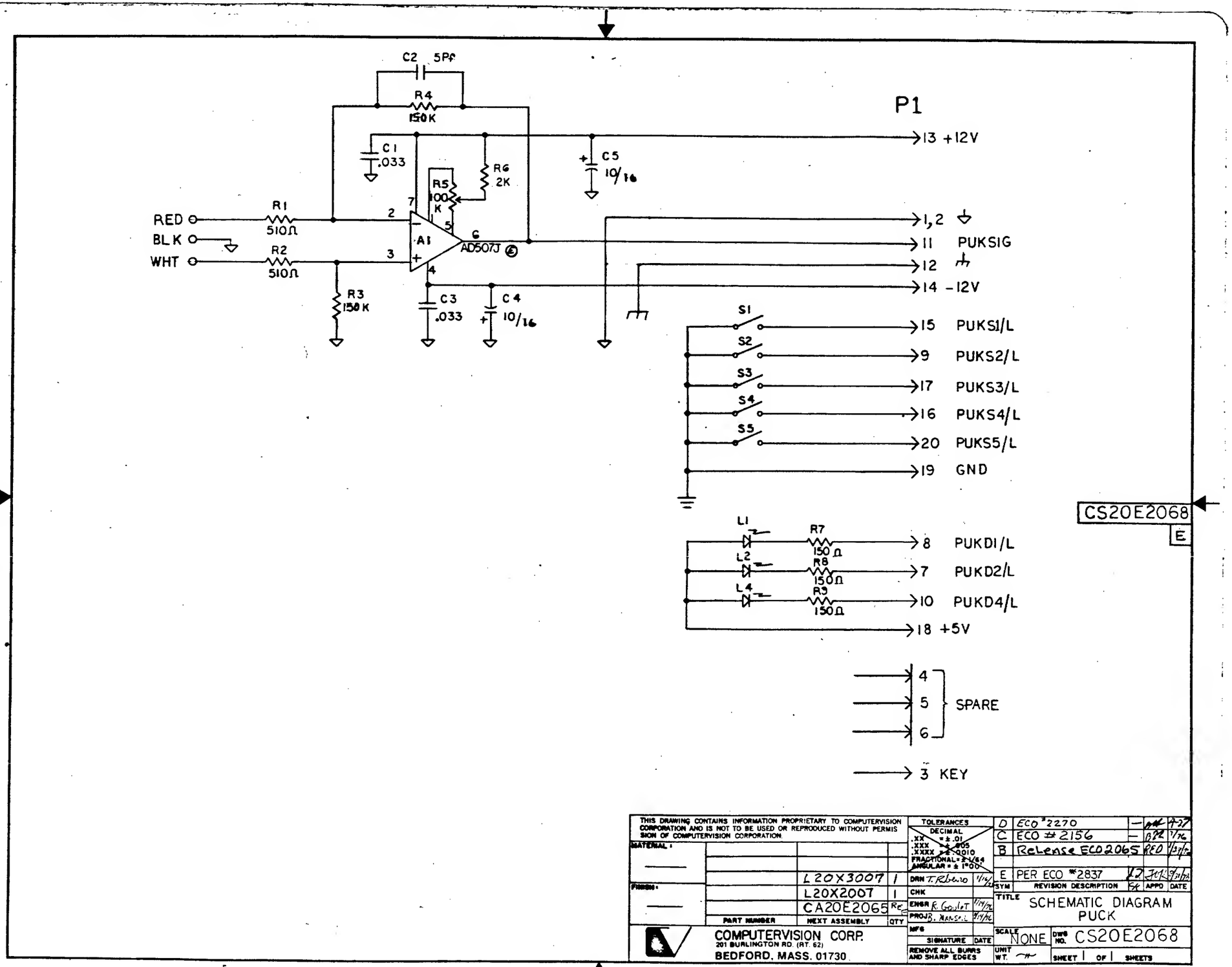

P1
C2 5PF
R4 150K
C1 .033
R6 2K
R5 100K
C5 10/16
RED
BLK
WHT
R1 510Ω
R2 510Ω
R3 150K
A1
AD507J
C3 .033
C4 10/16
13 +12V
1,2
11 PUKSIG
12
14 -12V
S1
S2
S3
S4
S5
15 PUKS1/L
9 PUKS2/L
17 PUKS3/L
16 PUKS4/L
20 PUKS5/L
19 GND
L1
L2
L4
R7 150Ω
R8 150Ω
R9 150Ω
8 PUKD1/L
7 PUKD2/L
10 PUKD4/L
18 +5V
4
5
6
SPARE
3 KEY
CS20E2068
E
THIS DRAWING CONTAINS INFORMATION PROPRIETARY TO COMPUTERVISION CORPORATION AND IS NOT TO BE USED OR REPRODUCED WITHOUT PERMISSION OF COMPUTERVISION CORPORATION.
MATERIAL:
FINISH:
L20X3007 1
L20X2007 1
CA20E2065 REF
PART NUMBER
NEXT ASSEMBLY
QTY
COMPUTERVISION CORP.
201 BURLINGTON RD. (RT. 62)
BEDFORD, MASS. 01730
TOLERANCES
DECIMAL
.XX = ± .01
.XXX = ± .005
.XXXX = ± .0010
FRACTIONAL = ± 1/64
ANGULAR = ± 1°00'
DRN T. Rivero 1/16/72
CHK
ENGR R. Goulet 1/14/72
PROJ B. Mansell 1/14/72
MFG
SIGNATURE
DATE
REMOVE ALL BURRS AND SHARP EDGES
D ECO #2270
C ECO #2156
B Release ECO2065
E PER ECO #2837
SYM
REVISION DESCRIPTION
APPD
DATE
TITLE
SCHEMATIC DIAGRAM
PUCK
SCALE NONE
DWG NO. CS20E2068
UNIT WT.
SHEET 1 OF 1 SHEETS

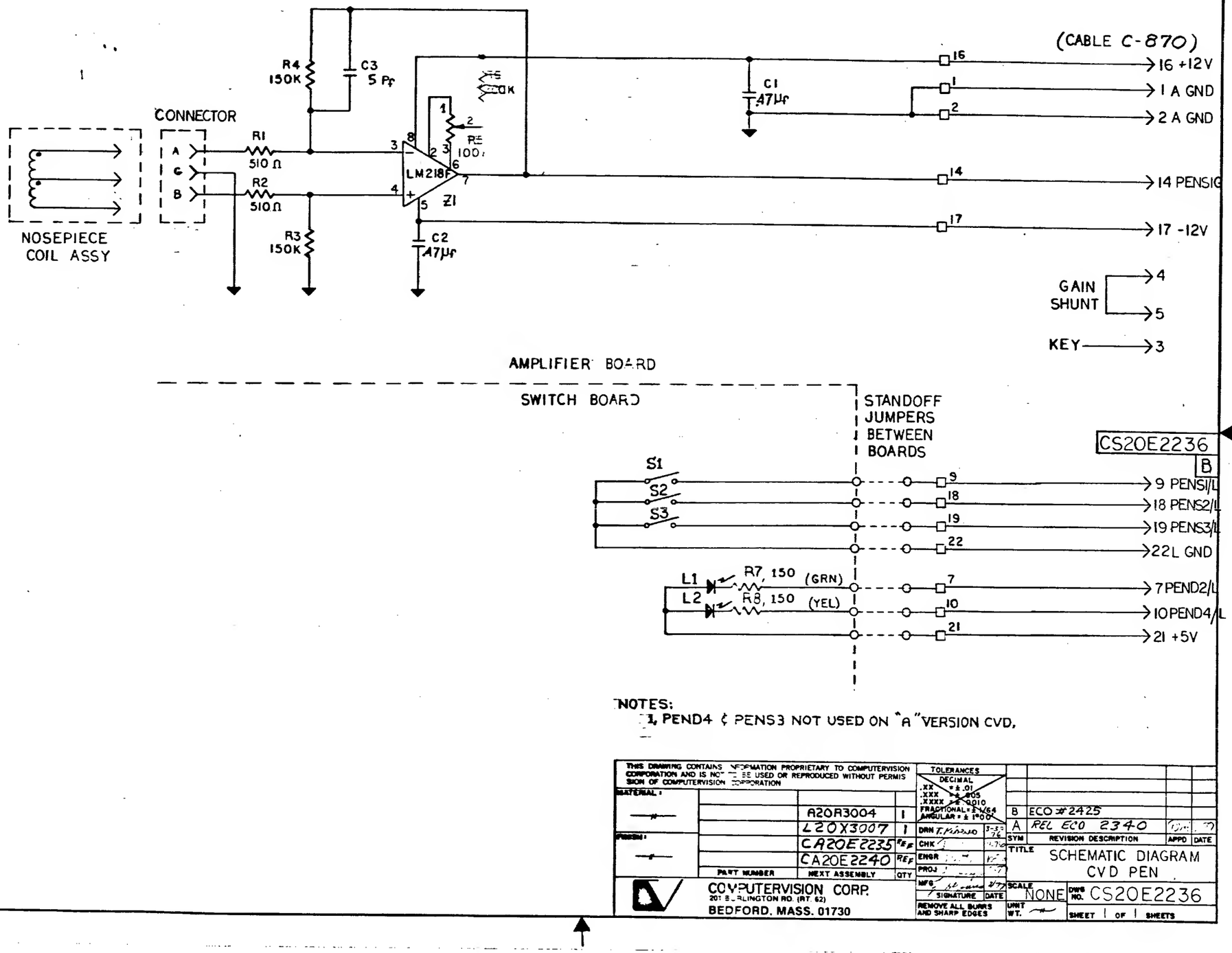

CS20E2236

B

NOTES:

1, PEND4 & PENS3 NOT USED ON "A" VERSION CVD.

THIS DRAWING CONTAINS INFORMATION PROPRIETARY TO COMPUTERVISION CORPORATION AND IS NOT TO BE USED OR REPRODUCED WITHOUT PERMISSION OF COMPUTERVISION CORPORATION

PART NUMBER	NEXT ASSEMBLY	QTY
A20R3004		1
L20X3007		1
CA20E2235	REF	
CA20E2240	REF	

TOLERANCES
DECIMAL
.XX ± .01
.XXX ± .005
.XXXX ± .0010
FRACTIONAL ± 1/64
ANGULAR ± 1°00'

DRN T. MARINO 5-12-76
CHK
ENGR
PROJ
MFG
SIGNATURE DATE

REMOVE ALL BURRS AND SHARP EDGES

SYM	REVISION DESCRIPTION	APPD	DATE
B	ECO #2425		
A	REL ECO 2340		

TITLE: SCHEMATIC DIAGRAM CVD PEN

SCALE: NONE
DWG NO. CS20E2236
UNIT WT.
SHEET 1 OF 1 SHEETS

COMPUTERVISION CORP.
201 BURLINGTON RD. (RT. 62)
BEDFORD, MASS. 01730

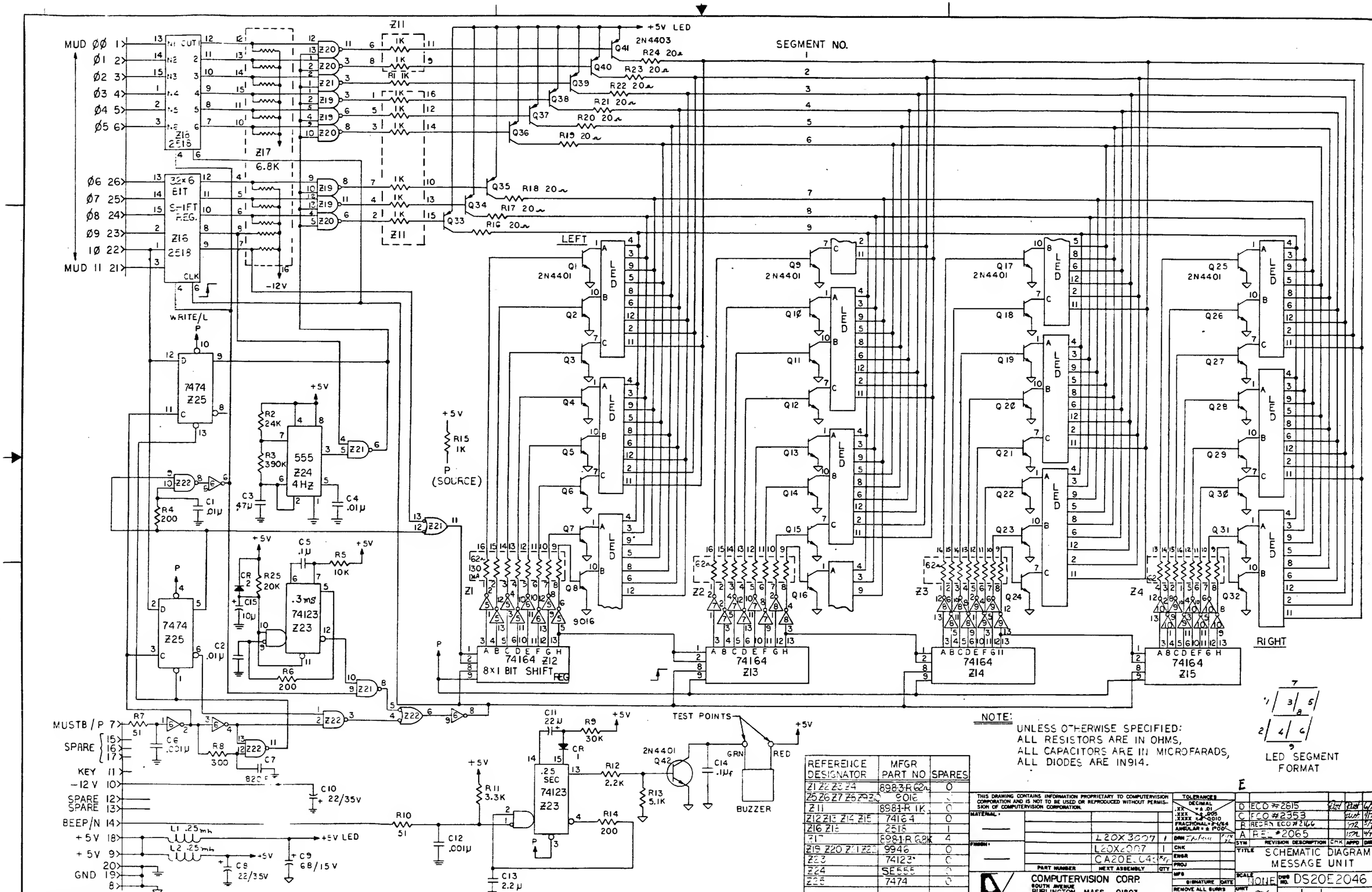

NOTE:
UNLESS OTHERWISE SPECIFIED:
ALL RESISTORS ARE IN OHMS,
ALL CAPACITORS ARE IN MICROFARADS,
ALL DIODES ARE IN914.

REFERENCE DESIGNATOR	MFGR PART NO	SPARES
Z1 Z2 Z3 Z4	898-3-R 62Ω	0
Z5 Z6 Z7 Z8 Z9 Z10	9016	0
Z11	898-1-R 1K	0
Z12 Z13 Z14 Z15	74164	0
Z16 Z18	2518	1
Z17	898-1-R 6.8K	4
Z19 Z20 Z21 Z22	9946	0
Z23	74123	0
Z24	SE555	0
Z25	7474	0

THIS DRAWING CONTAINS INFORMATION PROPRIETARY TO COMPUTERVISION CORPORATION AND IS NOT TO BE USED OR REPRODUCED WITHOUT PERMISSION OF COMPUTERVISION CORPORATION.

MATERIAL: —
FINISH: —

PART NUMBER	NEXT ASSEMBLY	QTY
	L20X3007	1
	L20X2007	1
	CA20E2046	REF

COMPUTERVISION CORP.
SOUTH AVENUE
BURLINGTON, MASS. 01803

TOLERANCES
DECIMAL
.XX ± .01
.XXX ± .005
.XXXX ± .0010
FRACTIONAL ± 1/64
ANGULAR ± 1°00'

DRN T. Tolman
CHK
ENGR
PROJ
MFG
SIGNATURE DATE
REMOVE ALL BURRS AND SHARP EDGES

SYM	REVISION DESCRIPTION	CHK	APPD	DATE
D	ECO #2815			6/79
C	ECO #2353			4/77
B	REDRN ECO #2166			5/76
A	REL #2065			4/76

TITLE SCHEMATIC DIAGRAM MESSAGE UNIT

SCALE NONE
DWG NO. DS20E2046
UNIT WT.
SHEET 1 OF 1 SHEETS

CABLE	ASSY	PAGE
C863	CA20E3063	2
C864	CA20E3064	2
C865	CA20E3065	2
C866	CA20E3066	2
C867	DA20E3067	3
C868	CA20E3068	3
C869	CA20E3069	3
C870	DA20E3070	3
C871	CA20E3071	2

CABLE	ASSY	PAGE
C872	CA20E3072	2
C873	CA20E3073	2
C874	CA20E3074	2
C875	DA20E3075	3
C878	CA20E3078	3
C737	R20E2137	2
C400	CA14E1001	4
TO EIA		4
TO CURRENT LOOP		4
TO KEYBOARD/PRINTER		4

THIS DRAWING CONTAINS INFORMATION PROPRIETARY TO COMPUTERVISION CORPORATION AND IS NOT TO BE USED OR REPRODUCED WITHOUT PERMISSION OF COMPUTERVISION CORPORATION.

TOLERANCES
DECIMAL
.XX ± .01
.XXX ± .005
.XXXX ± .0010
FRACTIONAL ± 1/64
ANGULAR ± 5 DEG

MATERIAL
FINISH

PART NUMBER	NEXT ASSEMBLY	QTY
L20X3007		1

SYM	REVISION DESCRIPTION	APPD	DATE
B	ECO #2440	J.T.	3-77
A	REL ECO 2270	J.H.	3-77

DRWD DAVIDSON 1-77
CHK 3-77
ENGR 3-77
PROJ 3-77
MFG 3-77

TITLE SYSTEM INTER-CONNECTION DIAGRAM

COMPUTERVISION CORP.
SOUTH AVENUE
BURLINGTON, MASS. 01803

SCALE NONE
DWG NO. DS20E3002
SHEET 1 OF 4 SHEETS

REMOVE ALL BURRS AND SHARP EDGES
UNIT WT.

REV A = REV 1

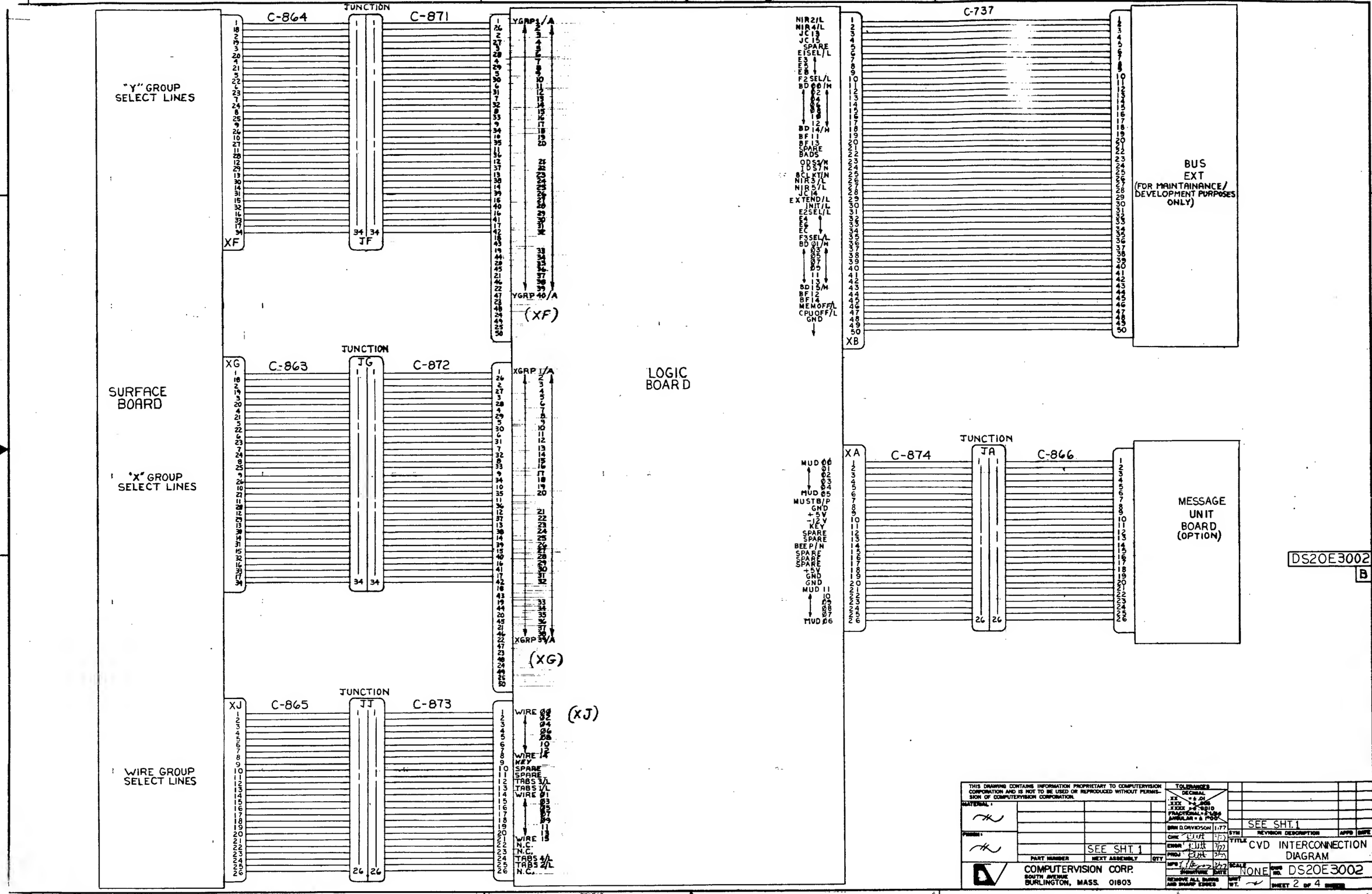

THIS DRAWING CONTAINS INFORMATION PROPRIETARY TO COMPUTERVISION CORPORATION AND IS NOT TO BE USED OR REPRODUCED WITHOUT PERMISSION OF COMPUTERVISION CORPORATION.

MATERIAL: SEE SHT. 1

FINISH:

PART NUMBER | NEXT ASSEMBLY | QTY

COMPUTERVISION CORP.
SOUTH AVENUE
BURLINGTON, MASS. 01803

REMOVE ALL BURRS AND SHARP EDGES

TOLERANCES
DECIMAL
.XX ± .01
.XXX ± .005
.XXXX ± .0010
FRACTIONAL ± 1/64
ANGULAR ± 5 POST

DRN D.DAVIDSON 1.77
CHK [illegible] 3/77
ENGR [illegible] 3/77
PROJ [illegible] 3/77
MFG [illegible] 3/77
QUALITY ASSURANCE DATE

SYM	REVISION DESCRIPTION	APPD	DATE
	SEE SHT. 1		

TITLE: CVD INTERCONNECTION DIAGRAM

SCALE: NONE | DWG NO. DS20E3002

WHT WT. | SHEET 2 OF 4 SHEETS

LOGIC BOARD

XL

IPULS1/A	1
IPRTN1/A	2
PEND2/H	3
PUKD1/H	4
PUKS1/L	5
PUKS2/L	6
PUKS3/L	7
PENS1/L	8
KEY	9
PENAD/H	10
INTAD/H	11
RSTINT/H	12
SWCMPL/H	13
RDB1/H	14
FSTAGR/L	15
ADB9/H	16
ADB7/H	17
ADB5/H	18
ADB3/H	19
IPLDET/L	20
IPULS2/A	21
IPRTN2/A	22
PUKD2/H	23
PUKD4/H	24
PUKS4/L	25
PUKS5/L	26
PENS2/L	27
SPARE	28
HIGAIN/H	29
INTIH/H	30
INTIPL/H	31
CMDPLS/N	32
PENS3/L	33
ADCMPL/H	34
ADSEL/L	35
ADB8/H	36
ADB6/H	37
ADB4/H	38
ADB2/H	39
PEND4/H	40

C-878

AXL

ANALOG BOARD

AJ4 C-868 PEN JUNCTION C-870

A GND	1
PENS1B	14
A GND	2
A GND	15
KEY	3
+12V	16
GAIN SHUNT	4
-12V	17
GAIN SHUNT	5
PENS2/L	18
SPARE	6
PENS1/L	19
PEND1/L	7
SPARE	20
SPARE	8
+5V	21
PENS1/L	9
GND	22
PENDIN	10
SPARE	23
SPARE	11
	24
	12
	25
	13
SPARE	26

N.C.

PEN (OPTION)

AJ3 C-869 PUCK JUNCTION C-867 J1

A GND	1
PUKS1G	14
A GND	2
A GND	15
KEY	3
+12V	16
SPARE	4
-12V	17
SPARE	5
PUKS1/L	18
SPARE	6
PUKS4/L	19
PUKD2/L	7
PUKS3/L	20
PUKD1/L	8
+5V	21
PUKS2/L	9
GND	22
PUKD4/L	10
PUKS5/L	23
SPARE	11
	24
	12
	25
	13
SPARE	26

N.C.

KEY

DIGITIZE PUCK

AJ2

	3
	5
SPARE	6
	4
KEY	15
	16
+5V	1
	2
	7
-12V	8
	9
	11
	12
	13
	17
+12V	18
	19
+12V SENSE	20
SENSE	14
-12V SENSE	10

XH

SENSE	1
+5V SENSE	2
+5V	6
-12V	4
+12V	7
KEY	3
	5
	8

C-875

WHT

BLK

GRN

9

8 115 VAC NEUT

7

6 115 VAC HOT

5

4

10Ω R5

3 SENSE

2 +5V SENSE

10Ω R4

1 +5V

8 -12V

30Ω R3

7 -12V SENSE

CR2

6 SENSE

15Ω R2

5

4

3 SENSE

CR1

2 +12V SENSE

30Ω R1

1 +12V

POWER SUPPLY

C858 TO BACKLIGHTING

AC IN 110 Vac 50/60 Hz

POWER DISTRIBUTION BOX

GRN

WHT

BLK

UNSWITCHED AC

AC1

AC2

SWITCHED AC

CB

SW

DS20E3002 B

THIS DRAWING CONTAINS INFORMATION PROPRIETARY TO COMPUTERVISION CORPORATION AND IS NOT TO BE USED OR REPRODUCED WITHOUT PERMISSION OF COMPUTERVISION CORPORATION.

TOLERANCES
DECIMAL
.XX ± .01
.XXX ± .005
.XXXX ± .0010
FRACTIONAL ± 1/64
ANGULAR ± 1 POC

DRN	D.DAVIDSON	11-77
CHK	K.H.	12-77
ENGR	D.H.	12-77
PROJ		12-77
MFG		1/78

SIGNATURE DATE

REMOVE ALL BURRS AND SHARP EDGES

MATERIAL

FINISH

PART NUMBER SEE SHT 1 NEXT ASSEMBLY QTY

COMPUTERVISION CORP.
SOUTH AVENUE
BURLINGTON, MASS. 01803

SYM	REVISION DESCRIPTION	APPD	DATE
	SEE SHT 1		JAN 78

TITLE CVD INTERCONNECTION DIAGRAM

SCALE NONE DWG NO. DS20E3002

UNIT WT.

SHEET 3 OF 4 SHEETS

C-400

XD

1	SHLD
14	TBLDTA/H
2	TBLDTA/L
15	SHLD
3	TBLBSY/H
16	TBLBSY/L
4	KEY
17	SPARE
5	
18	
6	
19	
7	
20	
8	
21	
9	
22	
10	
23	SPARE
11	IOBSY/H
24	IOBSY/L
12	SHLD
25	IODTA/H
13	IODTA/L
26	SHLD

XP

1	FG (AA)
2	DATA (BA)
3	DATA OUT (BB)
4	SPARE
5	CTS (CA)
6	DSR (CC)
7	DCD (CF)
8	3G (AB)
9	SPARE
10	
11	
12	
13	
14	
15	
16	
17	
18	
19	SPARE
20	DTR (CD)
21	SPARE
22	
23	
24	
25	SPARE

OPTIONAL RS-232C TERMINAL (EIA)

LOGIC BOARD

XM

1	PD6/H
21	PD2/H
2	PD3/H
22	PB3Y/H
3	PD1/H
23	PD7/H
4	PD0/H
24	PD4/H
5	PD5/H
25	N.C.
6	N.C.
26	PNLK/L
7	PSTB/P
27	PGND
8	N.C.
28	PGND
9	KEY
29	KEY
10	KBD2/H
30	N.C.
11	KBD0/H
31	KBD7/H
12	KBD1/H
32	KBD3/H
13	KBD6/H
33	KBD4/H
14	N.C.
34	KBD5/H
15	KBD+5V
35	KBD+5V
16	KBD GND
36	KBD GND
17	KBSTB/P
37	KBON/L
18	SPARE
38	SPARE
19	SPARE
39	SPARE
20	N.C.
40	N.C.

OPTIONAL PARALLEL PRINTER

OPTIONAL PARALLEL KEYBOARD

XE

1	SPARE
2	SPARE
3	SERIAL DATA IN
4	P/A SW
5	SPARE
6	SERIAL DATA OUT
7	20ma SOURCE
8	SPARE
9	GND

OPTIONAL CURRENT LOOP A/N TERMINAL

DS20E3002
B

THIS DRAWING CONTAINS INFORMATION PROPRIETARY TO COMPUTERVISION CORPORATION AND IS NOT TO BE USED OR REPRODUCED WITHOUT PERMISSION OF COMPUTERVISION CORPORATION.

MATERIAL: SEE SHEET 1

PART NUMBER | NEXT ASSEMBLY | QTY

COMPUTERVISION CORP.
SOUTH AVENUE
BURLINGTON, MASS. 01803

TOLERANCES
DECIMAL
.XX ± .01
.XXX ± .005
.XXXX ± .0010
FRACTIONAL ± 1/64
ANGULAR ± 1 DEG

DRWD. DAVIDSON 1-77
CHK
ENGR
PROJ
MFG
SIGNATURE | DATE

REMOVE ALL BURRS AND SHARP EDGES

SEE SHEET 1

SYM	REVISION DESCRIPTION	APPD	DATE

TITLE: CVD INTERCONNECTION DIAGRAM

SCALE: NONE
DWG NO. DS20E3002
SHEET 4 OF 4 SHEETS

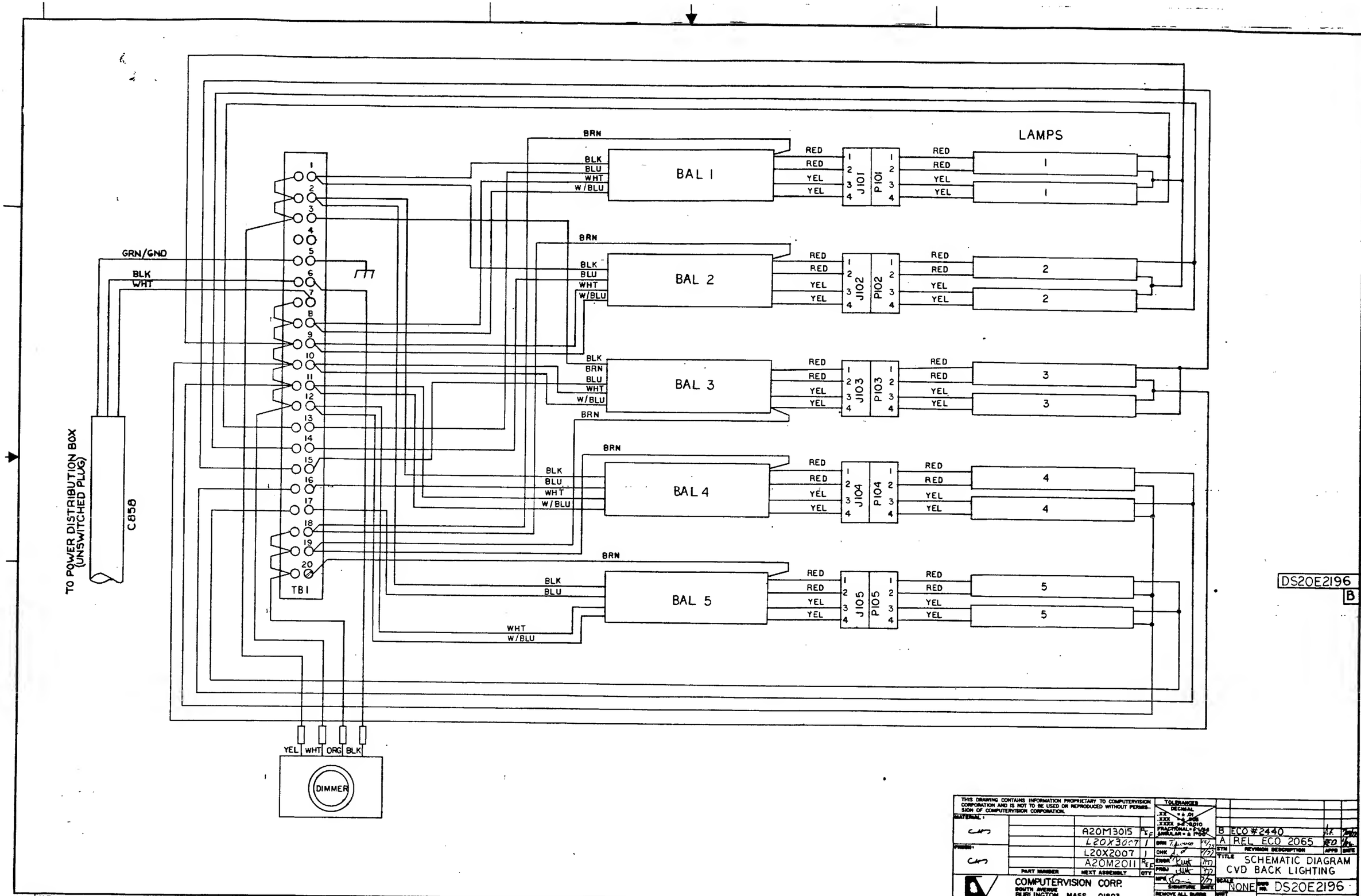
LAMPS
BAL 1
BAL 2
BAL 3
BAL 4
BAL 5
J101
P101
J102
P102
J103
P103
J104
P104
J105
P105
BRN
BLK
BLU
WHT
W/BLU
RED
YEL
GRN/GND
TB1
TO POWER DISTRIBUTION BOX (UNSWITCHED PLUG)
C858
YEL
WHT
ORG
BLK
DIMMER
DS20E2196
B
THIS DRAWING CONTAINS INFORMATION PROPRIETARY TO COMPUTERVISION CORPORATION AND IS NOT TO BE USED OR REPRODUCED WITHOUT PERMISSION OF COMPUTERVISION CORPORATION.
A20M3015
L20X3007
L20X2007
A20M2011
PART NUMBER
NEXT ASSEMBLY
QTY
COMPUTERVISION CORP.
SOUTH AVENUE
BURLINGTON, MASS. 01803
B ECO #2440
A REL ECO 2065
REVISION DESCRIPTION
TITLE
SCHEMATIC DIAGRAM
CVD BACK LIGHTING
SCALE
NONE
DWG NO. DS20E2196
SHEET 1 OF 1

BS20E3097 B

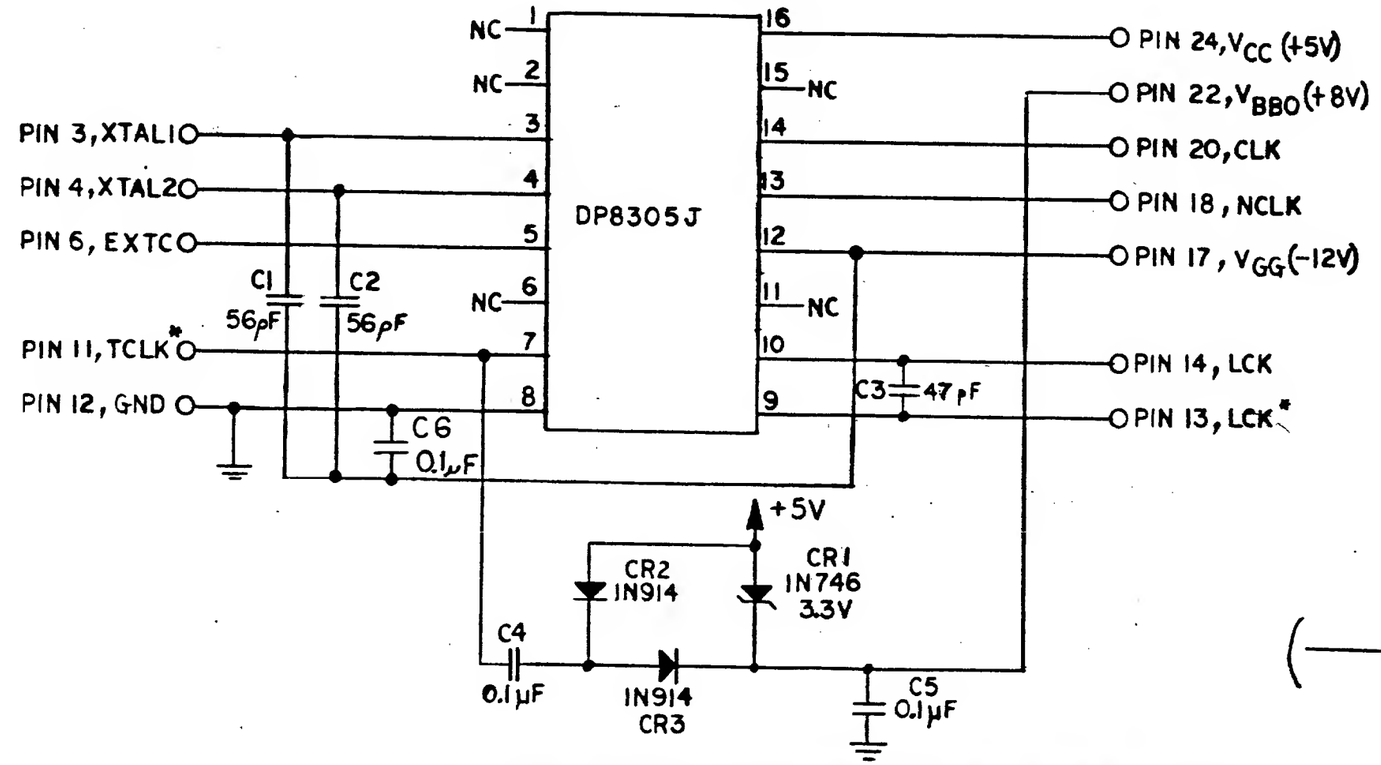

DENOTES 24-PIN ADAPTOR PLUG PIN

THIS DRAWING CONTAINS INFORMATION PROPRIETARY TO COMPUTERVISION CORPORATION AND IS NOT TO BE USED OR REPRODUCED WITHOUT PERMISSION OF COMPUTERVISION CORPORATION.

MATERIAL :

FINISH :

PART NUMBER	NEXT ASSEMBLY	QTY
L20X3007		1
L20X2007		1
DA20E3050		REF

TOLERANCES
DECIMAL
.XX = ± .01
.XXX = ± .005
.XXXX = ± .0010
FRACTIONAL = ± 1/64
ANGULAR = ± 1°00'

	SIGNATURE	DATE
DRN	R GETZ	8/77
CHK	RUH	8/77
ENGR	RUH	9/77
PROJ	RUH	8/77
MFG		

REMOVE ALL BURRS AND SHARP EDGES

SYM	REVISION DESCRIPTION	APPD	DATE
C			
B	ECO #2597	RUH	9/85
A	ECO # 2439	RUH	8/77

COMPUTERVISION CORP.
201 Burlington Road
Bedford, Massachusetts 01730

TITLE SCHEMATIC DIAGRAM
CVD TIMING BOARD

SCALE NONE
DWG NO. BS20E3097
UNIT WT.
SHEET 1 OF 1 SHEETS

MAKEPEACE P-2059